City of Richmond

Agenda

Development Permit Panel

Council Chambers, City Hall
6911 No. 3 Road

Wednesday, July 11, 2018
3:30 p.m.

MINUTES

Motion to adopt the minutes of the Development Permit Panel meeting held on June 27, 2018.

1. DEVELOPMENT PERMIT 17-781050
(REDMS No. 5868738 v. 3)

APPLICANT: 1082843 BC Ltd (Refined Properties)

PROPERTY LOCATION: 22720 and 22740 Westminster Highway

Director's Recommendations

That a Development Permit be issued which would:

1. ***permit the construction of a 25-unit townhouse project on a site zoned "High Density Townhouses (RTH1)"; and***
2. ***vary the provisions of Richmond Zoning Bylaw 8500 to reduce the exterior side yard setback to McLean Avenue from 4.5 m (14.8 ft.) to 4.0 m (13.1 ft.) for limited portions of two buildings.***

2. New Business

3. Date of Next Meeting: July 25, 2018

ADJOURNMENT

City of Richmond

Minutes

Development Permit Panel
Wednesday, June 27, 2018

Time:	3:30 p.m.
Place:	Council Chambers Richmond City Hall
Present:	Joe Erceg, Chair Robert Gonzalez, General Manager, Engineering and Public Works Cecilia Achiam, General Manager, Community Safety

The meeting was called to order at 3:34 p.m.

Minutes

It was moved and seconded
That the minutes of the meeting of the Development Permit Panel held on June 13, 2018 be adopted.

CARRIED

1. Development Permit 16-728670
(REDMS No. 5828465, 5877234)

APPLICANT: Anwer Kamal

PROPERTY LOCATION: 6571 No. 4 Road (formerly 6571/6573 No. 4 Road)

INTENT OF PERMIT:

Permit the construction of six townhouse units at 6571 No. 4 Road on a site zoned "Town Housing (ZT60) – North McLennan (City Centre)".

Applicant's Comments

Khalid Hasan, Remax Westcoast Realty, spoke on behalf of the applicant and highlighted the following changes to the landscaping in response to the Panel's referral at the June 13, 2018 meeting:

- the proposed Western Red Cedar replacement tree will be relocated from the northeast corner of the site to a new location in the outdoor amenity space in the southeast in order to avoid encroaching into the neighbouring townhouse development to the north;
- the new location of the replacement tree is adjacent to the landscaped area by the school driveway directly to the south of the subject site and will not conflict with any neighbouring property;
- the on-site pedestrian walkway is proposed to be shifted slightly to the north and the outdoor amenity space will be moved slightly to the south to accommodate the replacement tree; and
- trees originally proposed along the north property line will be shifted slightly to the south to provide greater separation between the trees and the adjacent townhouse development.

Staff Comments

Wayne Craig, Director, Development, advised that staff support the new location of the replacement tree and noted that the landscaping changes proposed by the applicant have addressed the Panel's referral.

In reply to a query from the Panel, Mr. Craig confirmed that the subject development permit application was endorsed by the Panel at its September 13, 2017 meeting but had to come back at the Panel's meeting on June 13, 2018 due to landscaping changes proposed by the applicant.

Gallery Comments

A resident of 6551 No. 4 Road, a townhouse complex immediately to the north of the subject site, posed a query regarding the potential impact of the proposed changes to the site lay-out and landscaping of the subject site in terms of the subject site's access to the existing driveway in the townhouse complex.

In reply to a query from the Panel, Mr. Craig advised that there is an existing Cross Access Easement registered on Title of 6551 No. 4 Road to provide vehicle access to the subject site.

In response to the query from the resident of 6551 No. 4 Road, the Chair advised that there will be no changes to the existing cross access easement.

Correspondence

None.

Panel Decision

It was moved and seconded
That a Development Permit be issued which would permit the construction of six townhouse units at 6571 No. 4 Road on a site zoned "Town Housing (ZT60) – North McLennan (City Centre)".

CARRIED

2. Development Variance 17-792200
(REDMS No. 5828162)

APPLICANT: Asif Siddiqui

PROPERTY LOCATION: 7100 No. 2 Road

INTENT OF PERMIT:

Vary the provisions of Richmond Zoning Bylaw 8500 to reduce the minimum rear yard from 6.0 m to 1.2 m for a one-storey garage to be attached to a single detached dwelling, which are proposed to be constructed at 7100 No. 2 Road on a site zoned "Compact Single Detached (RC2)".

Applicant's Comments

Khalid Hasan, Remax Westcoast Realty, spoke on behalf of the applicant, noting that (i) the City lane that bisects the subject site, the two-meter road dedication along the site frontage and zoning regulations have impacted the site lay-out and design of the single detached dwelling, (ii) the requested variance to reduce the minimum rear yard setback applies only to the proposed one-storey garage attached to the rear of the single detached dwelling, and (iii) the proposed outdoor amenity area for the subject site is intended for the use of residents of the single detached dwelling.

In reply to queries from the Panel, Mr. Hasan acknowledged that (i) the design proposal has changed since the applicant applied for rezoning several years ago, and (ii) there is no dedicated visitor parking space on the subject site; however, the driveway behind the garage could potentially accommodate visitor parking.

In reply to a query from the Panel, Mr. Craig confirmed that the residual lot on the east side of the lane is not required to be landscaped and could be a potential location for visitor parking space for the single detached dwelling.

Masa Ito, Ito and Associates Landscape Architects, briefed the Panel on the main landscaping features of the project, noting that (i) the proposed landscaping is consistent with the City's guidelines for landscaping for developments along an arterial road and provides for seasonal change and a variety of trees to be planted, (ii) grasscrete or similar surface paving materials could be installed on a portion of the proposed lawn at the southeast corner of the subject property to allow for visitor parking space.

Gallery Comments

None.

Correspondence

None.

Panel Discussion

The Chair noted that the space behind the driveway may not be adequate to accommodate visitor parking. Discussion ensued and staff was then directed by the Panel to work with the applicant to investigate opportunities for incorporating grasscrete or similar surface paving treatment to allow for visitor parking space on a portion of the landscaped area in the residual lot at the southeast corner of the subject site.

Panel Decision

It was moved and seconded
That a Development Variance Permit be issued which would vary the provisions of Richmond Zoning Bylaw 8500 to reduce the minimum rear yard from 6.0 m to 1.2 m for a one-storey garage to be attached to a single detached dwelling, which are proposed to be constructed at 7100 No. 2 Road on a site zoned "Compact Single Detached (RC2)".

CARRIED

3. Date of Next Meeting: July 11, 2018

4. Adjournment

It was moved and seconded
That the meeting be adjourned at 3:55 p.m.

CARRIED

Certified a true and correct copy of the Minutes of the meeting of the Development Permit Panel of the Council of the City of Richmond held on Wednesday, June 27, 2018.

Joe Erceg
Chair

Rustico Agawin
Committee Clerk

City of Richmond

Report to Development Permit Panel

To:	Development Permit Panel	**Date:**	June 19, 2018
From:	Wayne Craig Director of Development	**File:**	DP 17-781050
Re:	**Application by 1082843 BC Ltd (Refined Properties) for a Development Permit at 22720 and 22740 Westminster Highway**		

Staff Recommendation

That a Development Permit be issued which would:

1. Permit the construction of a 25-unit at townhouse project on a site zoned "High Density Townhouses (RTH1)"; and
2. Vary the provisions of Richmond Zoning Bylaw 8500 to reduce the exterior side yard setback to McLean Avenue from 4.5 m (14.8 ft.) to 4.0 m (13.1 ft.) for limited portions of two buildings.

Wayne Craig
Director of Development

WC: mm
Att. 3

Staff Report

Origin

1082843 BC Ltd (Refined Properties) has applied to the City of Richmond for permission to develop a 25-unit townhouse project at 22720 and 22740 Westminster Highway on a site zoned "High Density Townhouses (RTH1)". The site currently contains one single family dwelling.

The site is being rezoned from "Single Detached (RS1/F)" to "High Density Townhouses (RTH1)" for this project under Bylaw 9714 (RZ 16-754713).

A Servicing Agreement (SA 17-781881) for the following works is required to be entered into prior to adoption of rezoning:

- Road widening and construction of a cul-de-sac at the east end of McLean Avenue within road dedication provided as part of the subdivision for this project.
- Frontage works on Westminster Highway and McLean Avenue which include 1.5 m (4.9 ft.) wide concrete sidewalks and 1.5 m (4.9 ft.) wide boulevards with grass and street trees.
- Installation of a new sanitary main within a Statutory Right of Way (SRW) to be registered on the development site adjacent to McLean Avenue.

Development Information

Please refer to attached Development Application Data Sheet (**Attachment 1**) for a comparison of the proposed development data with the relevant Bylaw requirements.

Background

Development surrounding the subject site is as follows:

To the north, a townhouse development zoned "Town Housing (ZT11) – Hamilton".

To the south, across McLean Avenue, a church property zoned "Assembly (ASY)".

To the east, the remainder of the subject site is zoned "Single Detached (RS1/F)" which includes a single family dwelling and the Queen Canal further to the east.

To the west, across Westminster Highway, a single family property zoned "Single Detached (RS1/F)" and part of a townhouse development zoned "Town Housing (ZT11) – Hamilton".

Rezoning and Public Hearing Results

The Public Hearing for the rezoning of this site was held on June 19, 2017. At the Public Hearing, no concerns about the rezoning were expressed.

During the rezoning process, staff identified the following design issues to be resolved at the Development Permit stage:

- Adding further small-scale articulation and architectural detailing of the townhouse buildings, particularly those facing onto the public realm.

In response, the following have been included:

- *Further differentiation of materials and architectural detailing have been provided on the front façades of the buildings facing towards the public realm.*
- *Additional windows and more detailing have been added to the south side elevations of Buildings 2 and 6 given their high visibility from the McLean Avenue.*
- *Additional gables have been added to the roofs of Buildings 4 and 5 at the centre of the site.*

- Refining the landscape plans, particularly for the playground, large trellis structure near the driveway entrance, and to provide a robust landscape buffer to the existing townhouse complex to the north.

  In response, the following have been included:

  - *More substantial and attractive plantings have been specified to provide a more appropriate buffer to the adjacent townhouses to the north.*
  - *The outdoor amenity area has been enlarged and a more substantial play area and seating area provided.*
  - *The trellises in the outdoor amenity area and at the main driveway entry from McLean Avenue have been moved and designed with more substantial materials.*
  - *Additional groundcover and shrubs have been added to the small areas between the garage doors and internal driveways to provide some relief from the hard surfacing.*

Subdivision

The subject development site will be created by the re-subdivision of the two existing lots. The proposed townhouse development site on Parcel A will be created on the western portion of the site and Parcel B for the existing single family home to remain on the eastern portion of the site. The applicant has also prepared a concept plan for a possible future townhouse development on the proposed Parcel B which was reviewed by Staff and retained in the application file.

Staff Comments

The proposed scheme attached to this report has satisfactorily addressed the significant urban design issues and other staff comments identified as part of the review of the subject Development Permit application. In addition, it complies with the intent of the applicable sections of the Official Community Plan and is generally in compliance with the "High Density Townhouses (RTH1)" zone except for the zoning variance noted below.

Zoning Compliance/Variances (staff comments in **bold**)

The applicant requests to vary the provisions of Richmond Zoning Bylaw 8500 to reduce the exterior side yard setback to McLean Avenue from 4.5 m (14.8 ft.) to 4.0 m (13.1 ft.) for limited portions of two buildings.

(Staff supports the proposed variance as it applies to small sections of two buildings (Buildings 1 and 6 shown Development Permit Plan no. 6 of the Development Permit plans). These

variances were necessitated by the large amount of road dedication taken from the site to create a cul-de-sac bulb at the end of McLean Avenue as required during the rezoning process. Building 1 has been stepped and articulated to reduce the setback variance. Additional landscaping and an ornamental trellis have been included within the reduced setback to Building 6 to enhance the appearance of the development. The proposed variances were noted in the Staff Report to Planning Committee for the rezoning with no concerns raised at Planning Committee or the Public Hearing regarding the variances.)

Advisory Design Panel Comments

The Advisory Design Panel reviewed the proposal on April 18, 2018. A copy of the relevant excerpt from the Advisory Design Panel Minutes is attached for reference (**Attachment 2**). The design response from the applicant has been included immediately following the specific Design Panel comments and is identified in '***bold italics***'.

Analysis

Conditions of Adjacency

- The first habitable level of the buildings is at the 3.5 m Flood Construction Level. Given this, the ground level of the townhouses (at approximately 1.0 m elevation) is comprised of garages and entry foyers only.
- The development has appropriately addressed the adjacent Westminster Highway and McLean Avenue frontages with the design of the buildings and landscaping.
- The existing single family home on the proposed adjacent Lot B is to be maintained immediately east of the site. In the future, this lot may be re-developed for ground-oriented townhouses.
- Given the adjacency to Westminster Highway, the applicant will be required to register a covenant on title that ensures that the proposed development will be designed and constructed in a manner that mitigates potential highway noise from that may impact the proposed dwelling units. Prior to issuance of the Development Permit, the applicant must provide reports from professional engineers that address CMHC noise standards and interior thermal conditions.

Access, Parking and Loading

- Vehicle and pedestrian access to the townhouse project (Parcel A) will be provided by a single driveway from the cul-de-sac at the end of McLean Avenue. There will also be an adjacent driveway to the existing single family dwelling that will remain on Parcel B to the east.
- There will be 13 units with side-by-side double garages and 12 units with tandem double garages providing for unit choice and variation in building form. This arrangement with 44% of the parking spaces in a tandem arrangement is consistent with the maximum 50% tandem parking space Richmond Zoning Bylaw 8500.
- The drive aisles are designed to allow for maneuvering of SU9 (medium) trucks to accommodate on-site loading within the aisles as permitted by the Zoning Bylaw.

Urban Design and Site Planning

- Setbacks to Westminster Highway will be 4.5 m (14.8 ft.) which is similar to the setback to the neighbouring townhouse project immediately to the north.
- The setback to McLean Avenue will be 4.5 m (14.8 ft.) in most places with small portions of two units requiring a setback variance to 4.0 m (13.1 ft.) as discussed above.
- The proposed project will feature a 4.5 m (14.8 ft.) rear yard setback to the proposed single family residential lot to the east (designated for future townhouse development), and 3.0 m (9.8 ft.) side yard setback to the existing townhouse complex to the north of the development.
- A Statutory Right of Way (SRW) is being registered on the main driveway entrance to the townhouse site to maintain sufficient area for garbage, recycling and fire truck turning.
- To address the prominence of the driveway entrance given the size of the development and the small McLean Avenue cul-de-sac, the development includes a substantial trellis and seating area at the front of the project.

Architectural Form and Character

The proposed development includes 25 townhouse units with the following elements:

- The project's six (6) buildings are comprised of four (4) different neo-traditional buildings types designed to provide architectural variation.
- The project continues a similar townhouse streetscape along Westminster Highway as found in the adjacent townhouse complex to the north.
- The building are mainly clad with narrow horizontal vinyl siding and vinyl shingle siding alternating between units within each building to provide variety. There is also use of off-white hardi panel with timbers on portions of the units facing the public realm to provide further variety.
- The siding materials have a range of off-white and grey tones.
- The sloping roofs are clad in with charcoal grey asphalt shingles.

Units will have an average floor area of approximately of 111 m^2 (1,191 ft^2).

- The typical building height is three storeys with a maximum building height of 11.9 m (39 ft.) above finished grade, consistent with the RTH1 zone.

Landscape Design and Open Space Design

- The three buildings facing Westminster Highway and Mclean Avenue include individual front yards of 4.5 m (14.8 ft.) in depth with pathways leading to the public sidewalks on the adjacent streets; the remaining three internal buildings include rear yards averaging 4.0 m (13.1 ft.) in depth with large patios.
- This adjacent townhouse complex to the north is separated from the proposed development with an existing 2.0 m (6.6 ft.) solid wood fence, and a hedge and deciduous trees to be planted adjacent to the fence.

- The project will include 161 m^2 (1,729 ft^2) of common outdoor amenity area located near the centre of the development site. The proposed amenity areas are consistent with the requirements of the OCP. Main features of the central amenity area include:
  - Play area with play equipment.
  - Open air seating area and picnic table.
  - Trellis and trees buffering the area from the internal driveway.

Under the rezoning application for this project, the City's Tree Preservation Coordinator has reviewed the project arborist report and supports the arborist's findings for the removal of the 13 on-site trees within the development site to be replaced at minimum 2:1 ratio. The attached landscape plans include 55 trees within the development site, well in excess of the minimum 26 replacement trees required.

The developer will also remove invasive species and plant native vegetation within the Riparian Management Area in the Queen Canal corridor and on the adjacent existing single family dwelling lot (Lot B) to the east of the development site as a rezoning consideration.

Crime Prevention Through Environmental Design

- The development has been designed to provide private street-oriented townhouses that include front doors and provide surveillance of the adjacent streets.
- Plantings near residential entries have a low height to maximize views and casual surveillance.

Accessible Housing

- The proposed development includes two convertible units that can be modified to be fully accessible units in the future, should an owner elect to do so. These units will include framing to allow for a lift to be installed, wider doorways and corridors, an accessible washroom and kitchen, and other measures to allow for ease of conversion.
- All of the proposed units incorporate aging in place features to accommodate mobility constraints associated with aging. These features include:
  - stairwell hand rails;
  - lever-type handles for plumbing fixtures and door handles; and
  - solid blocking in washroom walls to facilitate future grab bar installation beside toilets, bathtubs and showers.

Energy and Sustainability

As required under the rezoning application, the development:

- Has been designed to be LEED Silver equivalent with an emphasis on building energy conservation strategies to achieve a LEED Silver rating of 65.5 points (see Attachment 3).
- Will also be Energuide 82 energy efficient; the applicant has submitted a HOT2000 report prepared by a qualified energy efficiency consultant.

Conclusions

As the proposed development would meet applicable policies and Development Permit Guidelines, staff recommends that the Development Permit be endorsed, and issuance by Council be recommended.

Mark McMullen
Senior Coordinator - Major Projects

MM:rg

The following are to be met prior to forwarding this application to Council for approval:

- Receipt of a Letter-of-Credit for landscaping in the amount of $146,669.00.
- Registration of a noise covenant on title that requires that the proposed development must be designed and constructed in a manner that mitigates potential noise from Westminster Highway that may impact the proposed dwelling units. Prior to issuance of the Development Permit, the applicant must provide reports from professional engineers that:
    - the dwelling units be designed and constructed to achieve the CMHC guidelines for interior noise levels as indicated in the chart below:

Portions of Dwelling Units	Noise Levels (decibels)
Bedrooms	35 decibels
Living, dining, recreation rooms	40 decibels
Kitchen, bathrooms, hallways, and utility rooms	45 decibels

    - the ASHRAE 55-2004 "Thermal Environmental Conditions for Human Occupancy" standard for interior living spaces.

Prior to future Building Permit issuance, the developer is required to complete the following:

- The applicant is required to obtain a Building Permit for any construction hoarding associated with the proposed development. If construction hoarding is required to temporarily occupy a street, or any part thereof, or occupy the air space above a street or any part thereof, additional City approvals and associated fees may be required as part of the Building Permit. *For further information on the Building Permit, please contact Building Approvals Department at 604-276-4285.*
- Submission of a construction traffic and parking management plan to the satisfaction of the City's Transportation Department (http://www.richmond.ca/services/ttp/special.htm).

City of Richmond

Development Application Data Sheet

Development Applications Department

DP 17-781050 **Attachment 1**

Address: 22720 and 22740 Westminster Highway

Applicant: 1082843 BC Ltd (Refined Properties) Owner: Han Su-Mei Sun & Eva Lu-Ping Sun

Planning Area(s): Hamilton

Floor Area Gross: 4,094 m^2 Floor Area Net: 2,683 m^2

	Existing	Proposed
Site Area:	7,280 m² (Two existing single-family lots)	3,820 m² (After subdivision taking off single-family lot & road dedication)
Land Uses:	Single Family Dwelling	Townhouse Development
OCP Designation:	Residential	Residential
Zoning:	Single Detached (RS1/F)	High Density Townhouses (RTH1)
Number of Units:	1	25

	Bylaw Requirement	Proposed	Variance
Floor Area Ratio:	0.75	0.70	none permitted
Lot Coverage:	Max. 45%	37%	none
Setback – Front Yard (Westminster Hwy):	Min. 4.5 m	4.5 m	none
Setback – Ext. Side Yard (McLean Ave):	Min. 4.5 m	4.0 m	Variance from 4.5 m to 4.0 m
Setback – Side Yard:	Min. 2.0 m	3.0 m	none
Setback – Rear Yard:	Min. 2.0 m	4.5 m	none
Height (m):	Max. 12 m	11.9 m	none
Lot Size:	1,800 m²	3,816 m²	none
Off-street Parking Spaces – Accessible:	2	3	none
Total off-street Spaces:	55	55	none
Tandem Parking Spaces	50%	44%	none
Amenity Space – Indoor:	Min. 70 m^2	Cash-In-Lieu	none
Amenity Space – Outdoor:	Min. 150 m^2	161 m^2	none

Attachment 2

Excerpt from the Minutes from
The Design Panel Meeting

Wednesday, April 18, 2018 – 4:00 p.m.
Rm. M.1.003
Richmond City Hall

DP 17-781050 - 25-UNIT TOWNHOUSE DEVELOPMENT

ARCHITECT: Engage Architecture

PROPERTY LOCATION: 22720 and 22740 Westminster Highway

Applicant's Presentation

Karen Smith, Engage Architecture, Robert Vrooman, Living Midtown Development, and Meredith Mitchell, M2 Landscape Architecture, presented the project and answered queries from the Panel.

Panel Discussion

Comments from Panel members were as follows:

- appreciate the applicant's decision to contribute to the City's public art fund; however, the applicant is encouraged to incorporate public art into the proposed project;

  Given the smaller size of the project and limited open space, the developer feels that the contribution to the public art fund will have greater overall impact than a limited scale piece of art on site.

- east-west orientation of townhouse units in the subject development mitigates adjacency impacts to the townhouse development to the north;

- consider a different treatment to the corner at Westminster Highway and McLean Avenue to make it more prominent; consider introducing a more public landscape treatment and/or an architectural treatment on the south side of the end unit of Building 2;

  Architectural treatment for this corner unit has been updated to widen the front bay and enlarge the main gable. Additional projections on this side of this building (e.g. chimney) are not possible due to the engineering right of way but windows have been realigned. Landscape design has added a bench and included ornamental species (Iris sibirica) on both sides of this bench.

- the proposed trellis at the site entry helps create a more pedestrian feel to the project; however, consider a different treatment to the landscaping at the site entry or a different architectural treatment on the south side of Building 6 to better define the site entry;

  The trellis has been shifted closer to the site entry. Side of Building 6 had already been updated and improved as part of last round of updates with Planning.

- appreciate the provision of two convertible units and aging-in-place features for all units; hope that the elevator door in the convertible units could swing in the opposite direction as opposed to what is currently proposed to provide easier access to a resident in wheelchair;

  Unit C2 has been updated to change door swing.

- consider an outward opening door or a barn door for the powder room on the second and third levels of the convertible units in lieu of an inward opening door to provide more manoeuvring space for a disabled person using a mobility equipment;

  Door swing for ensuite (which is the bath which provides accessible clearance) has been reversed.

- consider the door swing implications in the entry vestibule of the two convertible units; ensure a disabled visitor's accessibility to the elevator when entering the convertible unit through the front entry door;

  The change to the C2 unit to provide a wider gable has also created a wider entry porch; beyond that the sequence of doors cannot be improved upon without rendering parking area unusable.

- appreciate the clear presentation materials provided by the applicant;
- the project has an opportunity to make the connection to the Queen Canal into an interesting feature; hope that the City will continue to encourage future developments in the area to contribute to this endeavour;
- the City's Parks Department is advised to coordinate with the project's developer for the removal of invasive species and planting of native vegetation within the Riparian Management Area in the Queen Canal and on the existing single family dwelling site;

  Noted on Landscape plan.

- does not support the proposal to plant trees in planters along the McLean Avenue frontage; hope that the City will encourage the applicant to make the Westminster Highway and McLean Avenue corner more prominent and distinctive considering its proximity to the planned Hamilton Village Centre;

  The trees in planters along McLean Ave. are an Engineering requirement and are non-negotiable (the only acceptable alternative would be no trees, which is not an improvement).

- consider installing large trees at the corner, e.g. Copper Beeches or Blue Atlas Cedar to provide a gateway feel to the corner; also consider design development to the fence along the Westminster Highway and McLean Avenue frontages to provide more visual interest;

  On Westminster Highway, the street tree nearest the intersection with McLean has been changed to a distinct and unique one, Empress tree, to add emphasis to the corner.

- separation between the two buildings in the middle of the site is inadequate; hope that the six-meter setback to Westminster Highway could be reduced to provide more separation and privacy to the individual outdoor spaces of the middle units;

  City has agreed to a reduced setback on Westminster Highway which will increase separation; roof lines have also been updated to reduce the facing gables toward these back yards which will improved light penetration.

- does not support the proposed species and size of trees along the north property line as they could grow too big in the long term and potentially damage the infrastructure in the proposed development; consider installing root barriers on planting beds along the north border;

  Trees have been updated and in some cases relocated.

- support the location of the outdoor amenity space as it is south facing and sheltered within the development; however, the proposed amenity space design appears fussy and segmented; consider simplifying the design to provide a more continuous play space for children and facilitate their movement around the outdoor amenity space;

  The amenity space has been slightly increase in size (benefit from the setback change noted in item 13) and has been redesigned to make it more simple and useable. Larger play structure has been proposed.

- consider reorienting the trellis feature and introducing attractive flowering plants to cover the whole trellis feature to make the site entry more prominent;

  The trellis has been shifted closer to the site entry. Planting around the trellis unchanged and includes: ornamental grasses, English lavender on the front which is an attractive flowering plant and trees at each end (Golden Fastigiate Beech).

- reconsider the use of stone bases for the trellis features as stone material is not used anywhere in the buildings;

  The detailing of the trellis has been updated to better reflect the architectural material palette.

- reconsider the planting of Douglas Fir along the north property line as they could get too big in the future; consider installing a big conifer tree at the southeast corner of the site;

  The Douglas Fir has been replaced by a Scarlet Oak; and relocated to the south close to the trellis where is more spacious.

- generally, the architecture is elegant considering the constraints of the site;
- support the comment that the applicant provided a clear presentation of the project;
- agree with comment that the project works well considering the constraints of the site;
- proposed east-west orientation of townhouse units in the subject development mitigates overlook concerns for the existing townhouse development to the north;
- appreciate the schematic diagram showing the potential interface of the subject development with the possible future layout of the proposed east lot;
- end conditions of the buildings work successfully and effectively address potential overlook concerns for adjacent developments;
- agree with comment that there needs to be a wider separation between Buildings 4 and 5 at the centre of the development; applicant has done what it could; however, a relaxation of the required front yard setback along Westminster Highway would enhance the livability of the middle units; ***Provided, see previous comment.***
- the four-plexes along the Westminster Highway frontage are appropriate in scale; appreciate the variations on the building designs through changes in materiality and colour; also like the different approach for the McLean Avenue frontage which features a combination of side and front facades;
- generally, the two street frontages work well together; however, agree with comments that the Westminster Highway and McLean Avenue corner could be strengthened; applicant could install public art to better identify the corner; ***Updated, see previous comment.***
- support the idea of a less rigorous cul-de-sac entry to the site which is different from most townhouse developments; appreciate the organic approach;
- consider providing a threshold surface treatment between the lane and the public sidewalk going into the development, e.g.,introducing banding or variation in texturing to delineate private and public zones; could also serve as a traffic calming measure;

  The public sidewalk will carry through and some feature banding has been added.

- garbage and recycling area is logically located; consider increasing the width of the entry aperture to mitigate conflicts with on-site vehicular traffic during garbage and recycling pick-ups;

  The reduced setback along Westminster Highway has also resulted in more space beside Building 1; this building has been shifted to create more space at the garbage and recycling room and landscaping updated to provide better access.

- pedestrian connectivity to/from the site is already adequate; too much site permeability and connectivity may give rise to CPTED issues considering the size of the development;

- support the variety of colours and architectural expression of the buildings; consider introducing hardy materials to reduce the artificial feel of the cladding and provide more variety and options for the colour palette;

  Change to materials has been considered by developer and no change proposed at this time.

- like the rhythm, size and scale of units fronting Westminster Highway; however, consider varying the sizes of the gables, e.g., central and end gables could be larger to provide more differentiation between the units and to better announce the corner of the site;

  Wider bay has been provided at the C2 unit which creates a larger gable at both ends of that streetscape.

- appreciate the simplicity and slightly contemporary arrangement considering the heritage style of the buildings; buildings are not too fussy; good use of balance between light and dark colours to break up the general arrangement of buildings;

- support the location of the outdoor amenity space as it has good sun exposure and visibility;

- appreciate the provision of private outdoor spaces both at grade and on the second level for all individual townhouse units; however, investigate opportunities to enlarge the private outdoor areas for units in the middle cluster;

  Increased outdoor space provided through the reduced setback on Westminster Highway, see previous comment.

- generally, the project is well planned; however, concerned about the lack of separation between Buildings 4 and 5 in the middle of the subject site; investigate opportunities to push the west buildings closer to Westminster Highway to shift Building 4 westward and allow greater separation from Building 5;

  Increased building spacing provided through the reduced setback on Westminster Highway, see previous comment.

- agree with comments that further articulation is needed along the Westminster Highway edge; investigate opportunities to provide a gateway feel to the Westminster Highway and McLean Avenue corner, e.g., installing a vertical chimney feature at the corner unit;

  Updated, see previous comments.

- concerned about the lack of solar access to the units within the two middle buildings; consider design development to the roofs of these units to allow more sunlight penetration;

  Rooflines have been updated to reduce facing gables and buildings have moved further apart.

- consider introducing surface treatment, e.g., installing coloured pavers and not necessarily a whole banding, in front of the whole width of the outdoor amenity space;

  Provided additional surface treatment.

- agree with comment that the project is successful considering the nature and constraints of the project;
- support the proposed architectural style of the buildings and the location and design of the outdoor amenity space;
- would have preferred that garbage and recycling not be located near the site entry; consider design development of the garbage room (e.g., roof overhang need not project too much) and provide landscaping and screening in front of the garbage room;

  Garbage room has been updated and more screening provided.

- 18 inches in depth for entry canopies is not adequate; consider increasing the depth from a functional perspective and in order to create more definition along the Westminster Highway frontage;

  We have added some simple roof elements which will increase the cover at these doors to 3' depth.

- investigate opportunities to allow more sunlight penetration into the main living space and kitchen area of units within Building 6 to enhance the livability of these units;

  Considered; no change proposed. These are a very standard unit type which has been shown to be very liveable on numerous previous projects.

- agree with comment to install pavers or ground surface treatment in front of the outdoor amenity space; will not only enhance the site but also enlarge the outdoor amenity space;

  Provided, see previous comments.

- proposed seating area at the southeast corner of the site does not read as intended for community use and could be monopolized by the occupants of the adjacent townhouse unit; consider moving the seating area closer to the cul-de-sac to make the residents understand that they are for community use;

  This area has been redesigned by landscape and the seating area replaced with planting.

- review the choice of bench and play equipment for the children's play area; consider a bigger climbing play equipment for children;

  The play structure has been updated.

- the project's design team has done a good job;
- commend the applicant for the presentation of the project and for the package provided to the Panel;
- appreciate the proposed architecture for the buildings; however, space between Buildings 4 and 5 is tight;

  Updated, space increased.

- does not support the extensive use of vinyl shake on the buildings as they appear low cost; the applicant is advised not to use this material;

  No change to material proposed at this time but being taken under consideration.

- consider continuing the public sidewalk across the McLean Avenue frontage; will make the development feel nicer;

  Sidewalk will continue across frontage.

- consider the extra location of any exterior heating and cooling equipment in the early stage of the project to ensure that yard spaces will not be tight;

  Noted; we will begin discussion shortly with Mechanical consultant.

- recommend that the two convertible units have the ability to incorporate a side-by-side washer and dryer;

  Reviewed and not possible given the other constraints for this plan; dual purpose units (which serve as both washer and dryer) exist on the market and it would be reasonable to a homeowner to replace stacked washer/dryer with such a unit should the need arise.

- support the location of the outdoor amenity space; however, consider simplifying its design as there is a public park across Westminster Highway; also consider a more creative play equipment;

  Updated, see previous comments.

- agree with the suggestion to rotate the trellis to better identify the site entry subject to the location of the pad mounted transformer (PMT);

  Updated, see previous comments.

- consider installing pavers to the entrance of units within Buildings 2 and 3 to be consistent with other units in the development;

  Pavers have been added to entrances to building 2 and 3 entries to match Building 1.

- support the comment to install significant trees at the corner of Westminster Highway and McLean Avenue to create a gateway feel to the corner; and

  Updated, see previous comments.

- support the architectural form and character of the proposed development; also appreciate the colour palette.

LEED Canada for Homes Simplified Project Checklist

Builder Name:	
Project Team Leader (if different):	***Refined Properties***
Home Address (Street/City/Province):	***22720 Westminster Highway, Richmond, BC***

Project Description:

Building type: ***Multi-family*** Project type: ***Multi-family De***

# of units: ***25*** Avg. Home Size Adjustment: ***0***

Adjusted Certification Thresholds

Certified: ***45.0*** Gold: ***75.0***

Silver: ***60.0*** Platinum: ***90.0***

Project Point Total Final Credit Category Total Points

Preliminary: 65.5 + 17 maybe pts Final: 21 ID: 1 SS: 3 EA: 12 EQ: 0

Certification Level LL: 7 WE: 0 MR: 0 AE: 0

Preliminary: Silver Final: Not Certified Minimum-Point Thresholds not met for Final Rating

date last updated :

last updated by :

				Max Points	Project Points Preliminary			Final
Innovation and Design Process (ID)		(No Minimum Points Required)		Max	Y/Pts	Maybe	No	Y/Pts
1. Integrated Project Planning	1.1	Preliminary Rating		Prereq	Y			Y
	1.2	Integrated Project Team		1	1	0		0
	1.3	Professional Credentialed with Respect to LEED Canada for Homes		1	0	1		0
	1.4	Design Charrette		1	0	0		0
	1.5	Building Orientation for Solar Design		1	0	0		0
2. Durability Management Process	2.1	Durability Planning		Prereq	Y			
	2.2	Durability Management		Prereq	Y			
	2.3	Third-Party Durability Management Verification		3	3	0		0
3.Innovative or Regional Design	3.1	Innovation #1 _____		1	1	0		1
	3.2	Innovation #2 _____		1	0	0		0
	3.3	Innovation #3 _____		1	0	0		0
	3.4	Innovation #4		1	0	0		0
			Sub-Total for ID Category:	**11**	5	1		1
Location and Linkages (LL)		(No Minimum Points Required)	*OR*	Max	Y/Pts	Maybe	No	Y/Pts
1. LEED ND	1	LEED for Neighbourhood Development	**LL2-6**	10	0	0	N	0
2. Site Selection	2	Site Selection		2	2	0		0
3. Preferred Locations	3.1	Edge Development	**LL 3.2**	1	0	0		0
	3.2	Infill		2	2	0		2
	3.3	Previously Developed		1	1	0		0
4. Infrastructure	4	Existing Infrastructure		1	1	0		1
5. Community Resources/ Transit	5.1	Basic Community Resources / Transit	**LL 5.2, 5.3**	1	0	0	N	0
	5.2	Extensive Community Resources / Transit	**LL 5.3**	2	0	0	N	0
	5.3	Outstanding Community Resources / Transit		3	3	0		3
6. Access to Open Space	6	Access to Open Space		1	1	0		1
			Sub-Total for LL Category:	**10**	10	0		7
Sustainable Sites (SS)		(Minimum of 5 SS Points Required)	*OR*	Max	Y/Pts	Maybe	No	Y/Pts
1. Site Stewardship	1.1	Erosion Controls During Construction		Prereq	Y			
	1.2	Minimize Disturbed Area of Site		1	1	0		0
2. Landscaping	2.1	No Invasive Plants		Prereq	Y			
	2.2	Basic Landscape Design	**SS 2.5**	2	0	2		0
	2.3	Limit Conventional Turf	**SS 2.5**	3	2	1		0
	2.4	Drought Tolerant Plants	**SS 2.5**	2	2	0		0
	2.5	Reduce Overall Irrigation Demand by at Least 20%		6	0	0		0
3. Local Heat Island Effects	3	Reduce Local Heat Island Effects		1	0	0		0
4. Surface Water Management	4.1	Permeable Lot		4	0	1		0
	4.2	Permanent Erosion Controls		1	1	0		0
	4.3	Management of Runoff from Roof		2	0	0		0
5. Nontoxic Pest Control	5	Pest Control Alternatives		2	1.5	0		0
6. Compact Development	6.1	Moderate Density	**SS 6.2, 6.3**	2	0	0		0
	6.2	High Density	**SS 6.3**	3	3	0		3
	6.3	Very High Density		4	0	0		0
			Sub-Total for SS Category:	**22**	10.5	4		3

LEED Canada for Homes Simplified Project Checklist (continued)

					Max Points	Project Points Preliminary			Final
Water Efficiency (WE)			(Minimum of 3 WE Points Required)	OR	Max	Y/Pts	Maybe	No	Y/Pts
1. Water Reuse		1.1	Rainwater Harvesting System	**WE 1.3**	4	0	0		**0**
		1.2	Graywater Reuse System	**WE 1.3**	4	0	0		**0**
		1.3	Use of Municipal Recycled Water System		3	0	0		**0**
2. Irrigation System	✎	2.1	High Efficiency Irrigation System	**WE 2.3, 2.4**	3	2	1		**0**
		2.2	Third Party Inspection	**WE 2.3, 2.4**	1	0	1		**0**
	✎	2.3	Reduce Overall Irrigation Demand by at Least 45%	**WE 2.4**	4	0	0		**0**
		2.4	Non-Potable Water Irrigation System		4	0	0	N	**0**
3. Indoor Water Use		3.1	Fixture Efficiencies		Prereq	Y			
		3.2	High-Efficiency Fixtures and Fittings		3	2	0		**0**
		3.3	Very High Efficiency Fixtures and Fittings		6	2	0		**0**
				Sub-Total for WE Category:	**15**	6	2		**0**
Energy and Atmosphere (EA)			(Minimum of 0 EA Points Required)	OR	Max	Y/Pts	Maybe	No	Y/Pts
1. Optimize Energy Performance		1.1	Minimum Energy Performance		Prereq	Y			
		1.2	Exceptional Energy Performance		34	12	0		**12**
2. Insulation		2.1	Basic Insulation		Prereq				
		2.2	Enhanced Insulation		2	0	0		**0**
3. Air Infiltration		3.1	Reduced Envelope Leakage		Prereq				
		3.2	Greatly Reduced Envelope Leakage		2	0	0		**0**
		3.3	Minimal Envelope Leakage	**EA 3.2**	3	0	0		**0**
4. Windows		4.1	Good Windows		Prereq				
		4.2	Enhanced Windows		2	0	0		**0**
		4.3	Exceptional Windows	**EA 4.2**	3	0	0		**0**
5. Heating and Cooling Distribution System		5.1	Reduced Distribution Losses		Prereq				
		5.2	Greatly Reduced Distribution Losses		2	0	0		**0**
		5.3	Minimal Distribution Losses	**EA 5.2**	3	0	0		**0**
6. Space Heating and Cooling Equipment	✎	6.1	Good HVAC Design and Installation		Prereq				
		6.2	High-Efficiency HVAC		2	0	0		**0**
		6.3	Very High Efficiency HVAC	**EA 6.2**	4	0	0		**0**
7. Water Heating	✎	7.1	Efficient Hot Water Distribution		2	0	0		**0**
		7.2	Pipe Insulation		1	0	0		**0**
		7.3	Efficient Domestic Hot Water Equipment		3	0	0		**0**
8. Lighting		8.1	ENERGY STAR Lights		Prereq	Y			
		8.2	Improved Lighting		1.5	0	0		**0**
		8.3	Advanced Lighting Package	**EA 8.2**	3	3	0		**0**
9. Appliances		9.1	High-Efficiency Appliances		2	2	0		**0**
		9.2	Water-Efficient Clothes Washer		1	1	0		**0**
10. Renewable Energy	✎	10	Renewable Energy System		10	0	0		**0**
11. Residential Refrigerant Management		11.1	Refrigerant Charge Test		Prereq				
		11.2	Appropriate HVAC Refrigerants		1	0	0	N	**0**
				Sub-Total for EA Category:	**38**	18	0		**12**

Materials and Resources (MR)			(Minimum of 2 MR Points Required)	OR	Max	Y/Pts	Maybe	No	Y/Pts
1. Material-Efficient Framing		1.1	Framing Order Waste Factor Limit		Prereq	Y			
		1.2	Detailed Framing Documents	MR 1.5	1	0	1		0
		1.3	Detailed Cut List and Lumber Order	MR 1.5	1	0	1		0
		1.4	Framing Efficiencies	MR 1.5	3	0.5	1		0
		1.5	Off-site Fabrication		4	0	0		0
2. Environmentally Preferable Products	✓	2.1	FSC Certified Tropical Wood		Prereq	Y			
	✓	2.2	Environmentally Preferable Products		8	2	2		0
3. Waste Management		3.1	Construction Waste Management Planning		Prereq	Y			
		3.2	Construction Waste Reduction		3	1.5	1		0
				Sub-Total for MR Category:	16	4	6		0
Indoor Environmental Quality (EQ)			(Minimum of 6 EQ Points Required)	OR	Max	Y/Pts	Maybe	No	Y/Pts
1. ENERGY STAR with IAP		1	ENERGY STAR with Indoor Air Package		13	0	0		0
2. Combustion Venting		2.1	Basic Combustion Venting Measures	EQ 1	Prereq				Y
		2.2	Enhanced Combustion Venting Measures	EQ 1	2	2	0		0
3. Moisture Control		3	Moisture Load Control	EQ 1	1	0	0		0
4. Outdoor Air Ventilation	✓	4.1	Basic Outdoor Air Ventilation	EQ 1	Prereq				
	✓	4.2	Enhanced Outdoor Air Ventilation		2	2	0		0
		4.3	Third-Party Performance Testing	EQ 1	1	0	1		0
5. Local Exhaust	✓	5.1	Basic Local Exhaust	EQ 1	Prereq	Y			
		5.2	Enhanced Local Exhaust		1	1	0		0
		5.3	Third-Party Performance Testing		1	0	1		0
6. Distribution of Space Heating and Cooling	✓	6.1	Room-by-Room Load Calculations	EQ 1	Prereq	Y			
		6.2	Return Air Flow / Room by Room Controls	EQ 1	1	1	0		0
		6.3	Third-Party Performance Test / Multiple Zones	EQ 1	2	2	0		0
7. Air Filtering		7.1	Good Filters	EQ 1	Prereq				
		7.2	Better Filters	EQ 7.3	1	0	0		0
		7.3	Best Filters		2	0	0		0
8. Contaminant Control	✓	8.1	Indoor Contaminant Control during Construction	EQ 1	1	0	1		0
		8.2	Indoor Contaminant Control		2	0	0		0
	✓	8.3	Preoccupancy Flush	EQ 1	1	1	0		0
9. Radon Protection	✓	9.1	Radon-Resistant Construction: Passive Ventilation	EQ 1	Prereq				
	✓	9.2	Radon-Resistant Construction	EQ 1	1	0	0		0
10. Garage Pollutant Protection		10.1	No HVAC in Garage	EQ 1	Prereq				
		10.2	Minimize Pollutants from Garage	EQ 1, 10.4	2	2	0		0
		10.3	Exhaust Fan in Garage	EQ 1, 10.4	1	0	0		0
		10.4	Detached Garage or No Garage	EQ 1	3	0	0	N	0
				Sub-Total for EQ Category:	21	11	3		0
Awareness and Education (AE)			(Minimum of 0 AE Points Required)		Max	Y/Pts	Maybe	No	Y/Pts
1. Education of the Homeowner or Tenant	✓	1.1	Basic Operations Training		Prereq				
	✓	1.2	Enhanced Training		1	0	1		0
		1.3	Public Awareness		1	1	0		0
2. Education of Building Manager	✓	2	Education of Building Manager		1	0	0		0
				Sub-Total for AE Category:	3	1	1		0

City of Richmond

Development Permit

No. DP 17-781050

To the Holder:	1082843 BC LTD (REFINED PROPERTIES)
Property Address:	22720 AND 22740 WESTMINSTER HIGHWAY
Address:	343 RAILWAY STREET, SUITE B1, VANCOUVER, BC V6A 1A4

1. This Development Permit is issued subject to compliance with all of the Bylaws of the City applicable thereto, except as specifically varied or supplemented by this Permit.
2. This Development Permit applies to and only to those lands shown cross-hatched on the attached Schedule "A" and any and all buildings, structures and other development thereon.
3. The "Richmond Zoning Bylaw 8500" is hereby varied to reduce the exterior side yard setback to McLean Avenue from 4.5 m (14.8 ft.) to 4.0 m (13.1 ft.) for limited portions of two buildings.
3. Subject to Section 692 of the Local Government Act, R.S.B.C.: buildings and structures; off-street parking and loading facilities; roads and parking areas; and landscaping and screening shall be constructed generally in accordance with Plans #DP17-781050-1 to #DP17-781050-32 attached hereto.
4. Sanitary sewers, water, drainage, highways, street lighting, underground wiring, and sidewalks, shall be provided as required.
5. As a condition of the issuance of this Permit, the City is holding the security in the amount of $146,669.00 to ensure that development is carried out in accordance with the terms and conditions of this Permit. Should any interest be earned upon the security, it shall accrue to the Holder if the security is returned. The condition of the posting of the security is that should the Holder fail to carry out the development hereby authorized, according to the terms and conditions of this Permit within the time provided, the City may use the security to carry out the work by its servants, agents or contractors, and any surplus shall be paid over to the Holder. Should the Holder carry out the development permitted by this permit within the time set out herein, the security shall be returned to the Holder. The City may retain the security for up to one year after inspection of the completed landscaping in order to ensure that plant material has survived.
6. If the Holder does not commence the construction permitted by this Permit within 24 months of the date of this Permit, this Permit shall lapse and the security shall be returned in full.

Development Permit

No. DP 17-781050

To the Holder:	1082843 BC LTD (REFINED PROPERTIES)
Property Address:	22720 AND 22740 WESTMINSTER HIGHWAY
Address:	343 RAILWAY STREET, SUITE B1, VANCOUVER, BC V6A 1A4

7. The land described herein shall be developed generally in accordance with the terms and conditions and provisions of this Permit and any plans and specifications attached to this Permit which shall form a part hereof.

   This Permit is not a Building Permit.

AUTHORIZING RESOLUTION NO. ISSUED BY THE COUNCIL THE DAY OF , .

DELIVERED THIS DAY OF , .

MAYOR

City of Richmond

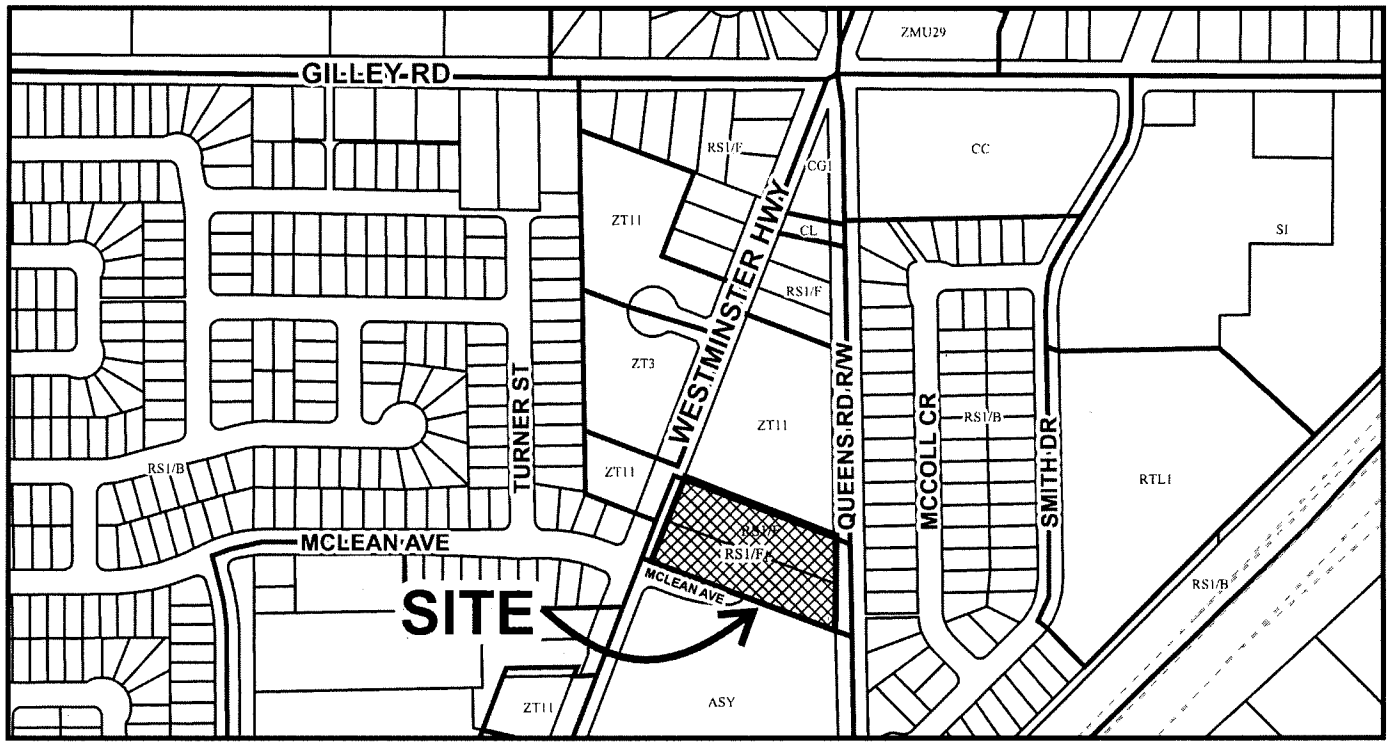

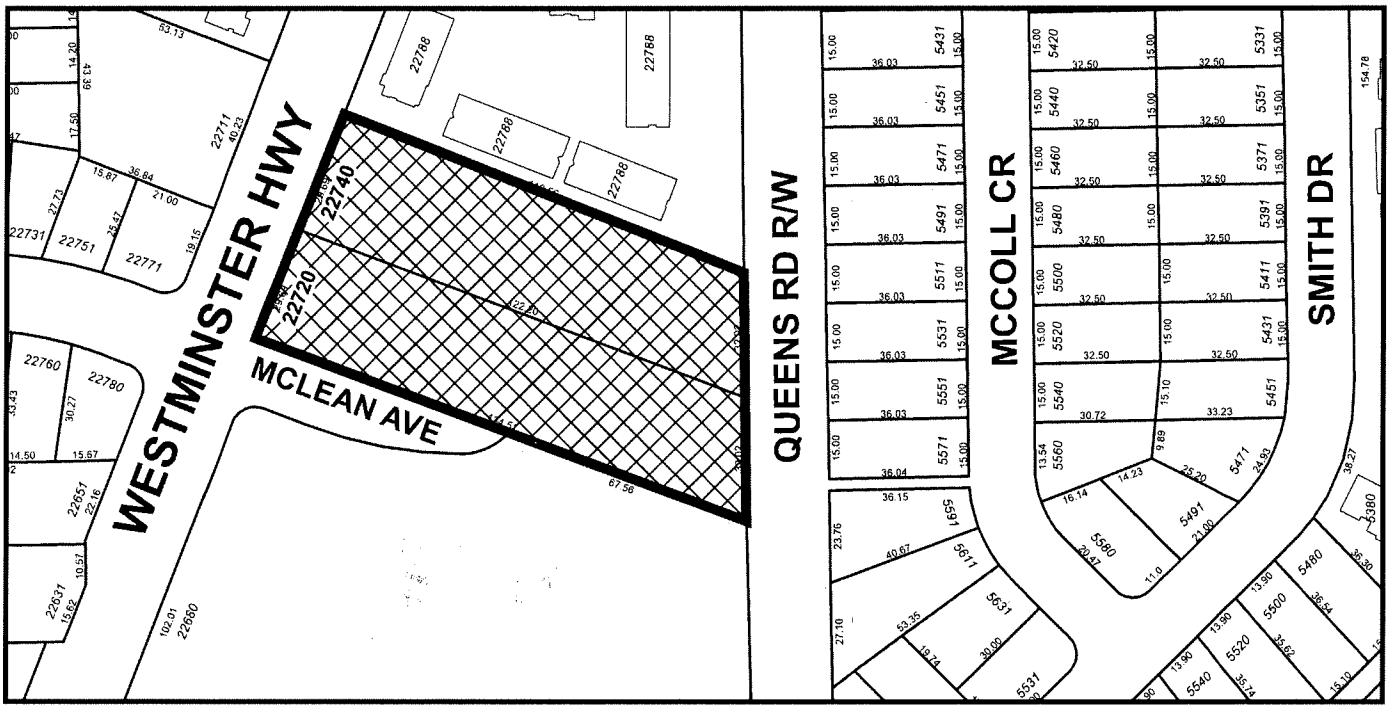

DP 17-781050
SCHEDULE "A"

Original Date: 08/04/17

Revision Date: 05/19/18

Note: Dimensions are in METRES

WESTMINSTER AND MCLEAN TOWNHOMES

22720 AND 22740 WESTMINSTER HIGHWAY
RICHMOND BC
DEVELOPMENT PERMIT MARCH 9, 2018

EXISTING LEGAL ADDRESS: LOTS 15 AND 16, BLOCK 4
NORTH, RANGE 4 WEST, N.W.D. PLAN 33645
PID: 003-486-206 AND 004-344-201

EXISTING ZONING: RS1/F
PROPOSED ZONING: RTH-1

OCP DESIGNATION: NEIGHBORHOOD
RESIDENTIAL(TOWNHOUSE 0.75 FAR)
HAMILTON AREA PLAN, LOWER WESTIMINSTER
SUB-PLAN

SITE
22720 Westminster Hwy
Westminster Hwy
Hamilton Rd
Hamilton Rd
Hamilton Rd

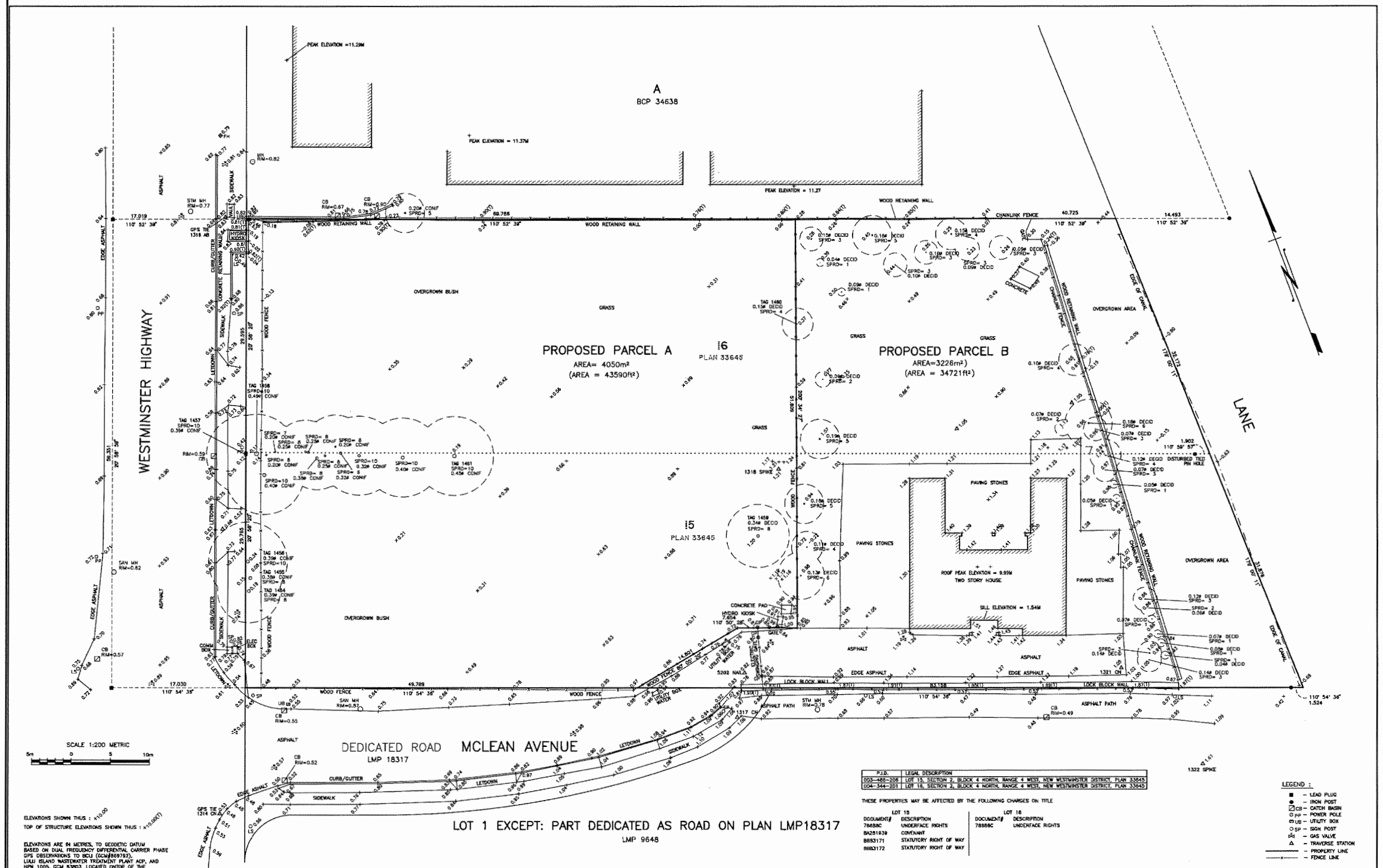

P.I.D.	LEGAL DESCRIPTION
003-466-206	LOT 15, SECTION 2, BLOCK 4 NORTH, RANGE 4 WEST, NEW WESTMINSTER DISTRICT, PLAN 33645
004-344-201	LOT 16, SECTION 2, BLOCK 4 NORTH, RANGE 4 WEST, NEW WESTMINSTER DISTRICT, PLAN 33645

THESE PROPERTIES MAY BE AFFECTED BY THE FOLLOWING CHARGES ON TITLE

LOT 15

DOCUMENT#	DESCRIPTION
78588C	UNDERFACE RIGHTS
BA251939	COVENANT
BB83171	STATUTORY RIGHT OF WAY
BB83172	STATUTORY RIGHT OF WAY

LOT 16

DOCUMENT#	DESCRIPTION
78588C	UNDERFACE RIGHTS

NO.	DD/MM/YY	REVISION	BY

UNDERHILL GEOMATICS LTD.
ENGINEERS & SURVEYORS
210A-3430 BRIGHTON AVENUE
BURNABY, B.C. V5A 3H4
TEL (604) 732-3364 FAX (604) 732-4709

FILE No. V16089-TOP-01-M-R0.dwg
F.B. 1877 PG. 129-142

DRAWN BY	JOB NO.	TITLE
P.M.	V16089	PROPOSED SUBDIVISION PLAN AND TOPOGRAPHIC SURVEY OF LOT 15 AND LOT 16, SECTION 2, BLOCK 4 NORTH, RANGE 4 WEST, NEW WESTMINSTER DISTRICT, PLAN 33645
SCALE 1:200	DATE AUG 8, 2016	CLIENT WESTBRIDGE CAPITAL GROUP

DRAWING NO. H-3171 REV. 0
SHEET 1 OF 1

J:\2016\V16089\Cad\ISSUED\V16089-TOP-01-M-R0.dwg, 8/8/2016 1:50:06 PM, Adobe PDF

This drawings must not be scaled. The General Contractor shall verify all dimensions, datums and levels prior to commencement of work. All errors and omissions to be reported immediately to the Architect. Variations and modifications to work shown shall not be carried out without the written permission from the Architect. Copyright reserved. These drawings and the design are, and at all times remain, the exclusive property of the Architect, and cannot be used and/or reproduced without the consent of the Architect, in which case the reproduction must bear their name as the Architect.

DRAWING ISSUES

1	DEC 22,2016	ISSUE FOR REZONING
2	APR 4 ,2017	RE-ISSUE FOR REZONING
3	JUL 19, 2017	ISSUE FOR DEVELOPMENT PERMIT
4	MAR 8, 2018	RE-ISSUE FOR DEVELOPMENT PERMIT

CONSULTANTS

CJEW

REFINED PROPERTIES

engage ARCHITECTURE

ENGAGE ARCHITECTURE INC
B1 - 343 RAILWAY STREET
VANCOUVER BC V6A 1A4
T: 778-772-4034
www.engagearchitecture.ca

PROJECT# 16.15

SEAL

PROJECT
WESTMINSTER AT MCLEAN TOWNHOUSES
22720 AND 22740 WESTMINSTER HWY.
RICHMOND BC

DRAWING
TOPOGRAPHIC SURVEY

CHECKED BY: DRAWN BY:

DATE: JULY 2016 SCALE: NTS

DWG No. A0-01

DP 17-781050-2

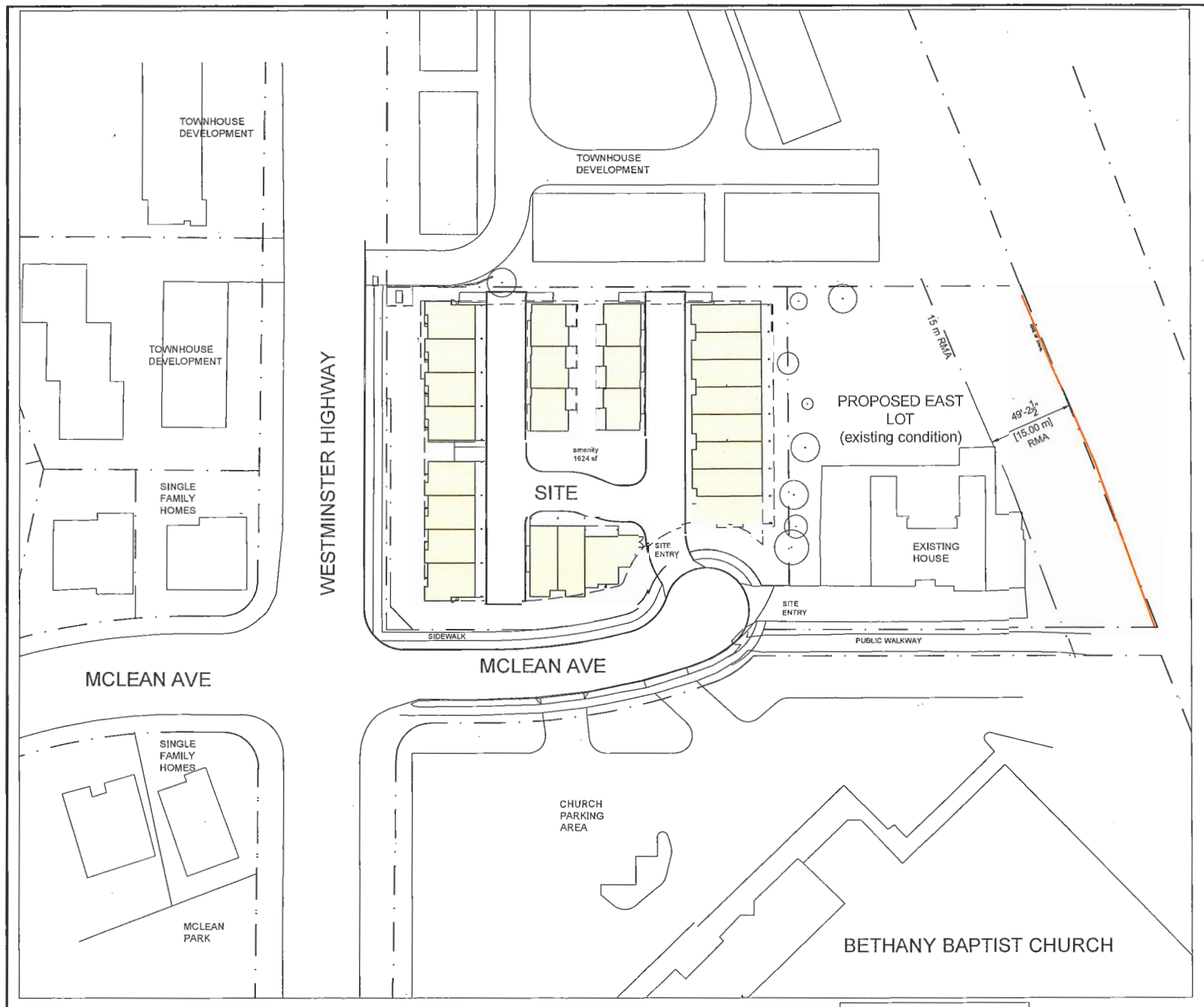

1 SITE CONTEXT PLAN (EXISTING)
1/32" = 1'-0"

City of Richmond Riparian Management Area (RMA)

- The RMA must not be altered except in accordance with a City approved permit and Construction Environmental Management Plan. No tree, shrub or ground cover removal; no storage of materials; no building, structure or surface construction including retaining walls can occur within an RMA.
- A brightly coloured, temporary fence of a minimum height of 1.2m must be erected at least 2m outside of the RMA. An erosion and sediment control fence must be installed on the property side of the brightly coloured fence. All additional RMA protection measures, as defined by a Qualified Environmental Professional must also be installed/completed.
- All protective fencing and erosion and sediment control measures must be in place before development begins, and remain in place until development is complete and final approval received.
- The landowner is responsible to restore to the satisfaction of the City any unauthorized development within the RMA.

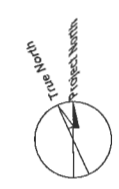

This drawings must not be scaled. The General Contractor shall verify all dimensions, datums and levels prior to commencement of work. All errors and omissions to be reported immediately to the Architect. Variations and modifications to work shown shall not be carried out without the written permission from the Architect. Copyright reserved. These drawings and the design are, and at all times remain, the exclusive property of the Architect, and cannot be used and/or reproduced without the consent of the Architect, in which case the reproduction must bear their name as the Architect.

DRAWING ISSUES

1	DEC 22, 2016	ISSUE FOR REZONING
2	APR 4, 2017	RE-ISSUE FOR REZONING
3	JUL 19, 2017	ISSUE FOR DEVELOPMENT PERMIT
4	MAR 9, 2018	RE-ISSUE FOR DEVELOPMENT PERMIT

CONSULTANTS

CLIENT

REFINED PROPERTIES

engage ARCHITECTURE

ENGAGE ARCHITECTURE INC
B1 - 343 RAILWAY STREET
VANCOUVER BC V6A 1A4
T: 778-772-4034
www.engagearchitecture.ca

PROJECT# 16.15

SEAL

PROJECT

WESTMINSTER AT MCLEAN TOWNHOUSES

22720 AND 22740 WESTMINSTER HWY, RICHMOND BC

DRAWING

SITE CONTEXT PLAN

CHECKED BY:	DRAWN BY:
KS	KS
DATE: JULY 2016	SCALE: 1/32" = 1'-0"

DWG No.

A0-02

DP 17-761050-3

1 STREETSCAPE ALONG WESTMINSTER HIGHWAY (WEST)
1/8" = 1'-0"

1 STREETSCAPE ALONG MCLEAN AVENUE (SOUTH)
1/8" = 1'-0"

This drawings must not be scaled. The General Contractor shall verify all dimensions, datums and levels prior to commencement of work. All errors and omissions to be reported immediately to the Architect. Variations and modifications to work shown shall not be carried out without the written permission from the Architect. Copyright reserved. These drawings and the design are, and at all times remain, the exclusive property of the Architect, and cannot be used and/or reproduced without the consent of the Architect, in which case the reproduction must bear their name as the Architect.

DRAWING ISSUES

1	DEC 22,2016	ISSUE FOR REZONING
2	APR 4 ,2017	RE-ISSUE FOR REZONING
3	JUL 19, 2017	ISSUE FOR DEVELOPMENT PERMIT
4	MAR 9, 2018	RE-ISSUE FOR DEVELOPMENT PERMIT

CONSULTANTS

CLIENT

REFINED PROPERTIES

engage ARCHITECTURE

ENGAGE ARCHITECTURE INC
B1 - 343 RAILWAY STREET
VANCOUVER BC V6A 1A4
T: 778-772-4034
www.engagearchitecture.ca

PROJECT# 16.15

SEAL

PROJECT
WESTMINSTER AT MCLEAN TOWNHOUSES
22720 AND 22740 WESTMINSTER HWY.
RICHMOND BC

DRAWING
STREETSCAPES

CHECKED BY: KS	DRAWN BY: KS
DATE: JULY 2016	SCALE: 1/8" = 1'-0"

DWG No.
A0-03

DP 17-781050-4

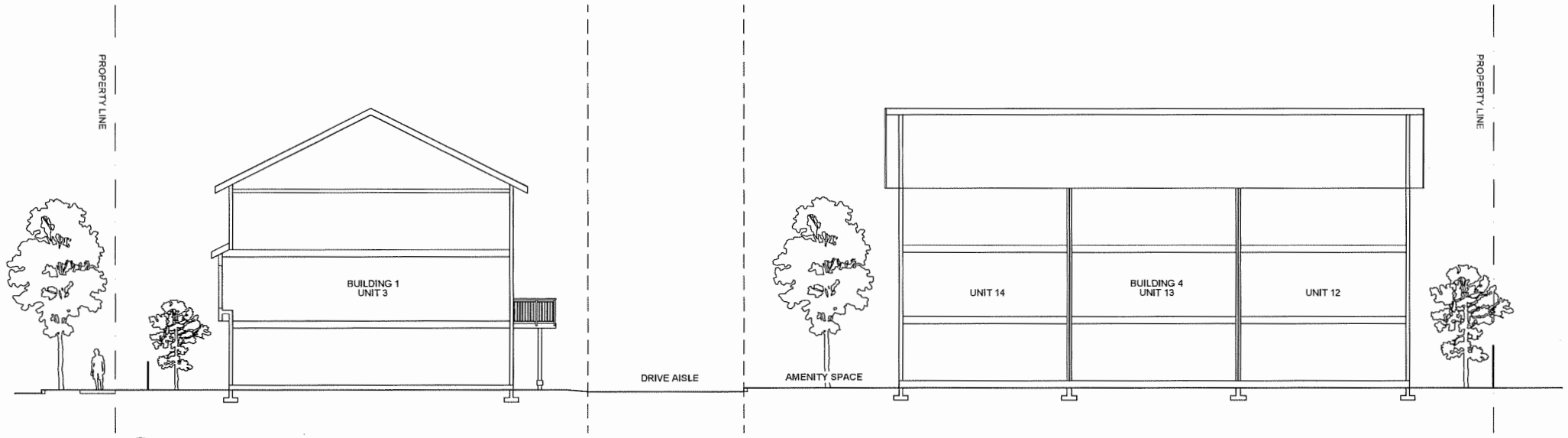

1 SITE SECTION
1/8" = 1'-0"

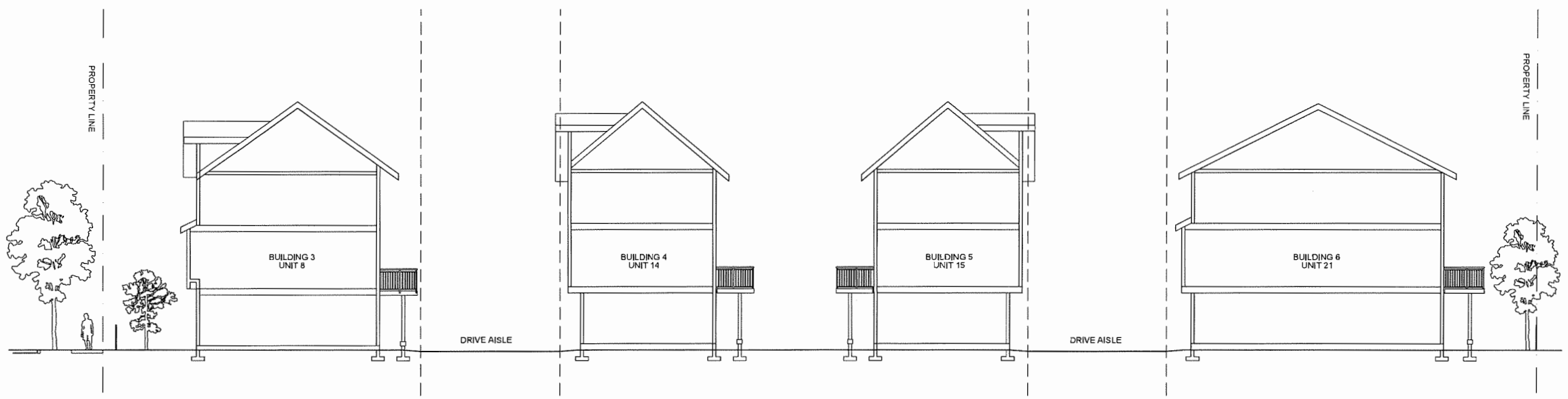

2 SITE SECTION
1/8" = 1'-0"

This drawings must not be scaled. The General Contractor shall verify all dimensions, datums and levels prior to commencement of work. All errors and omissions to be reported immediately to the Architect. Variations and modifications to work shown shall not be carried out without the written permission from the Architect. Copyright reserved. These drawings and the design are, and at all times remain, the exclusive property of the Architect, and cannot be used and/or reproduced without the consent of the Architect, in which case the reproduction must bear their name as the Architect.

DRAWING ISSUES

1	DEC 22,2016	ISSUE FOR REZONING
2	APR 4 ,2017	RE-ISSUE FOR REZONING
3	JUL 19, 2017	ISSUE FOR DEVELOPMENT PERMIT
4	MAR 8, 2018	RE-ISSUE FOR DEVELOPMENT PERMIT

CONSULTANTS

CLIENT

REFINED PROPERTIES

engage ARCHITECTURE

ENGAGE ARCHITECTURE INC
B1 - 343 RAILWAY STREET
VANCOUVER BC V6A 1A4
T: 778-772-4034
www.engagearchitecture.ca

PROJECT# 16.15

SEAL

PROJECT
WESTMINSTER AT MCLEAN TOWNHOUSES
22720 AND 22740 WESTMINSTER HWY.
RICHMOND BC

DRAWING
SITE SECTIONS

CHECKED BY: KS	DRAWN BY: KS
DATE: JULY 2016	SCALE: 1/8" = 1'-0"

DWG No.
A0-04

DP 17-781050 -5

22720 & 22740 Westminster Highway, Richmond BC

Site Summary

Existing zone	RS1-F			
Proposed zone	RTH-1			
Gross Site Area (pre-subdivision)			78311.2 sq.ft.	
Proposed East Lot			33903 sq.ft.	
Dedication (McLean Extension)			2937 sq.ft.	
Dedication (Westminster Hwy)			396 sq.ft.	
Net Site Area			41076 sq.ft.	
Permitted FAR	0.75		30807.0 sq.ft.	
Proposed FAR	0.70		28887.5 sq.ft.	
Coverage	Permitted	45%	18484.2 sq.ft.	
	Proposed	37%	15365.9 sq.ft.	
Hard Surface Coverage	Permitted	70%	28753.2 sq.ft.	
	Proposed	67%	27446.7 sq.ft.	
Height	Permitted	12m 39.4'		3 storey
	Proposed	11.9m 39.17'		3 storey
Net (FAR) Floor Area			28887.5 sq.ft.	
Unit Count		25 units		
Outdoor Amenity Space	Required	64.9 sq.ft./unit	=	1622.5 sq.ft.
	Proposed		=	1729 sq.ft.
Indoor Amenity Space	Required	70 m2	=	753 sq.ft.
	Proposed	Contribution in lieu		0 sq.ft.
Parking	Required	2 stalls/unit	=	50 stalls
	Proposed		=	50 stalls
Visitor Parking	Required	0.2 stalls/unit	=	5 stalls
	Proposed		=	5 stalls
Total Parking	55 stalls	of which		
Accessible Parking	Required	2% of total =		1.1 stalls
	Proposed			3 stalls
Tandem Parking	Permitted	50% of total		27.5 stalls
	Proposed	44%		24 stalls
Resident Bike Parking	Required	1.25 stalls/unit	=	31.25 stalls
	Proposed		=	45 stalls
Visitor Bike Parking	Required	0.2 stalls/unit	=	5 stalls
	Proposed		=	5 stalls

Setbacks	Direction		Required/Provided	
	North	(side yard)	3m	9'-10"
	East	(rear yard)	4.5m	14'-9"
	South (McLean)	(front and side)	4.5m*	14'-9"
	West (Westminster Highway)	(front yard)	6m	19'-8.25"

* 4.0 m at limited variance locations as shown on plan

Unit Summary Table

Unit	Description	Net (FAR) Area	Unit Count	Total (FAR) Area
A	3 bedroom interlock 1	1205.5 sq.ft.	1	1205.5 sq.ft.
A1 end	3 bedroom interlock 2 end	1314.9 sq.ft.	1	1314.9 sq.ft.
B	3 bedroom interlock 1	1220.3 sq.ft.	3	3660.9 sq.ft.
B1	3 bedroom interlock 2	1205.7 sq.ft.	3	3617.1 sq.ft.
B2 end	3 bedroom interlock 1 end	1301.2 sq.ft.	1	1301.2 sq.ft.
B3 end	3 bedroom interlock 2 end	1282.8 sq.ft.	1	1282.8 sq.ft.
C	3 bedroom, double garage	1085.7 sq.ft.	4	4342.8 sq.ft.
C1	3 bedroom end, double garage	1193.5 sq.ft.	3	3580.5 sq.ft.
C2	3 bedroom end, CONVERTIBLE	1148.8 sq.ft.	2	2297.6 sq.ft.
D	3 bedroom, double garage	1027.3 sq.ft.	2	2054.6 sq.ft.
D1	3 bedroom end, double garage	1060.5 sq.ft.	2	2121 sq.ft.
D2	3 bedroom end, double garage	1054.3 sq.ft.	2	2108.6 sq.ft.
TOTALS			25	28887.5 sq.ft.

Private Outdoor Space Summary

Mininum required per unit= 30 m2 323 sq.ft.

Unit	Balcony area	Dimensions	Yard Area	Dimensions	Total Area
A	100.8	15'-6" x 6'-6"	240.7	15'-6" x 14'-9"	341.5 sq.ft.
A1 end	101.9	15'-8" x 6'-6"	316.15	20'-3" x 14'-9"	418.05 sq.ft.
B	100.8	15'-6" x 6'-6"	228.9	15'-6" x 14'-9"	329.7 sq.ft.
B1	100.8	15'-6" x 6'-6"	228.9	15'-6" x 14'-9"	329.7 sq.ft.
B2 end	101.9	15'-8" x 6'-6"	728.1	29'-6" x 14'-9"	830 sq.ft.
B3 end	101.9	15'-8" x 6'-6"	228.6	15'-8" x 14'-9"	330.5 sq.ft.
C	115	19'-2" x 6'-0"	352.9	19'-2" x 17'-9"	467.9 sq.ft.
C1	116	19'-4" x 6'-0"	553.3	23'-4" x 17'-9"	669.3 sq.ft.
C2	116	19'-4" x 6'-0"	495.5	19'-2" x 17'-9"	611.5 sq.ft.
D	75	12'-6" x 6'-0"	306	23'-10"x13'-2"	381 sq.ft.
D1	75	12'-6" x 6'-0"	306	24'-0" x 13'-2"	381 sq.ft.
D1 (sideyard)	75	12'-6" x 6'-0"	479.5	34'-2" x 13'-2"	554.5 sq.ft.
D2	75	12'-6" x 6'-0"	306	24'-0" x 13'-2"	381 sq.ft.
D2 (sideyard)	75	12'-6" x 6'-0"	494.7	33'-9" x 13'-2"	569.7 sq.ft.

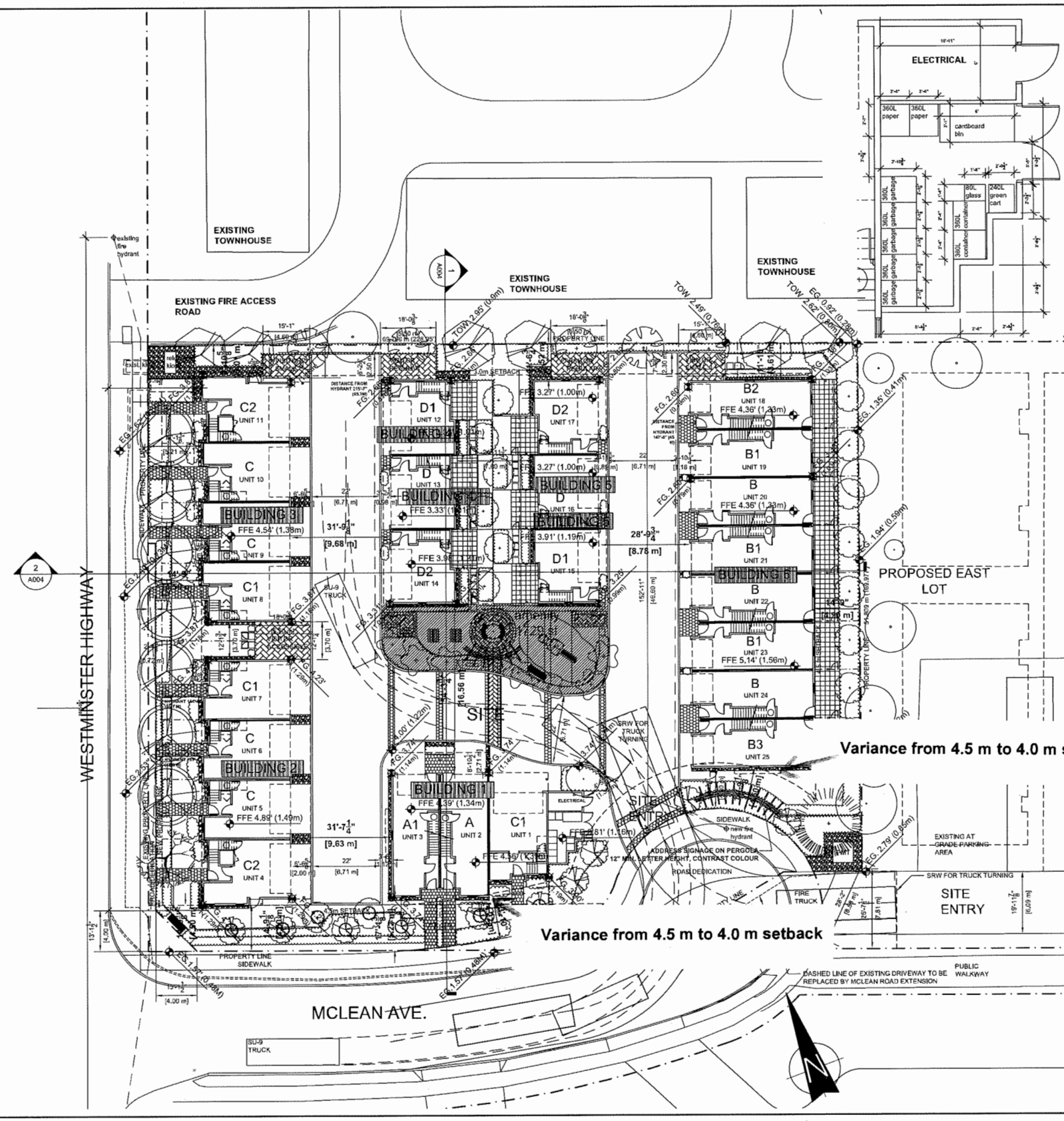

This drawings must not be scaled. The General Contractor shall verify all dimensions, datums and levels prior to commencement of work. All errors and omissions to be reported immediately to the Architect. Variations and modifications to work shown shall not be carried out without the written permission from the Architect. Copyright reserved. These drawings and the designs are, and at all times remain, the exclusive property of the Architect, and cannot be used and/or reproduced without the consent of the Architect, in which case the reproduction must bear their name as the Architect.

DRAWING ISSUES

1	DEC.22 2016	ISSUE FOR REZONING
2	APR 4 2017	RE-ISSUE FOR REZONING
3	JUL 19, 2017	ISSUE FOR DEVELOPMENT PERMIT
4	MAR 5, 2018	RE-ISSUE FOR DEVELOPMENT PERMIT

CONSULTANTS

CLIENT

REFINED

engage ARCHITECTURE

ENGAGE ARCHITECTURE INC
B1 - 343 RAILWAY STREET
VANCOUVER BC V6A 1A4
T: 778-772-4034
www.engagearchitecture.ca

PROJECT# 16.15

PROJECT
WESTMINSTER AT MCLEAN TOWNHOUSES
22720 AND 22740 WESTMINSTER HWY, RICHMOND BC

DRAWING
SITEPLAN AND DEVELOPMENT SUMMARY

CHECKED BY: KS
DRAWN BY: KS
DATE: JULY 2016
SCALE: 1/16" = 1'-0"
DWG No.
A1-00

DP 17-781050 -6

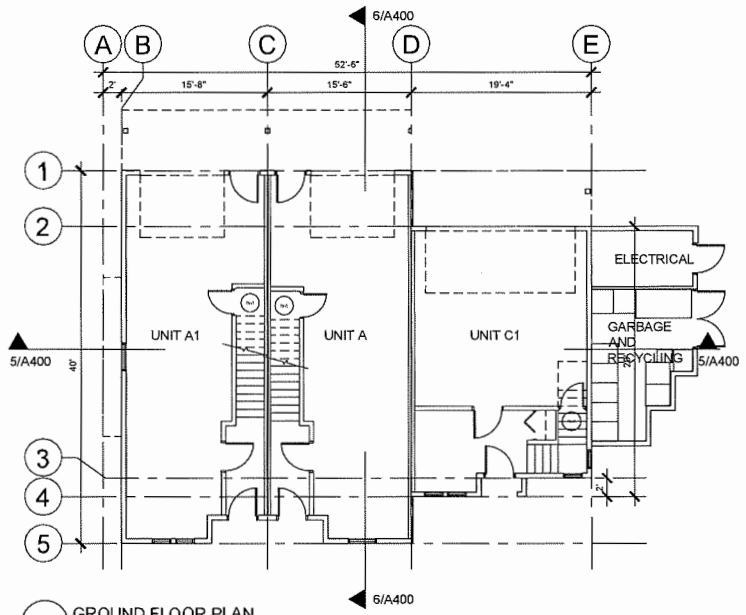

1 GROUND FLOOR PLAN
1/8" = 1'-0"

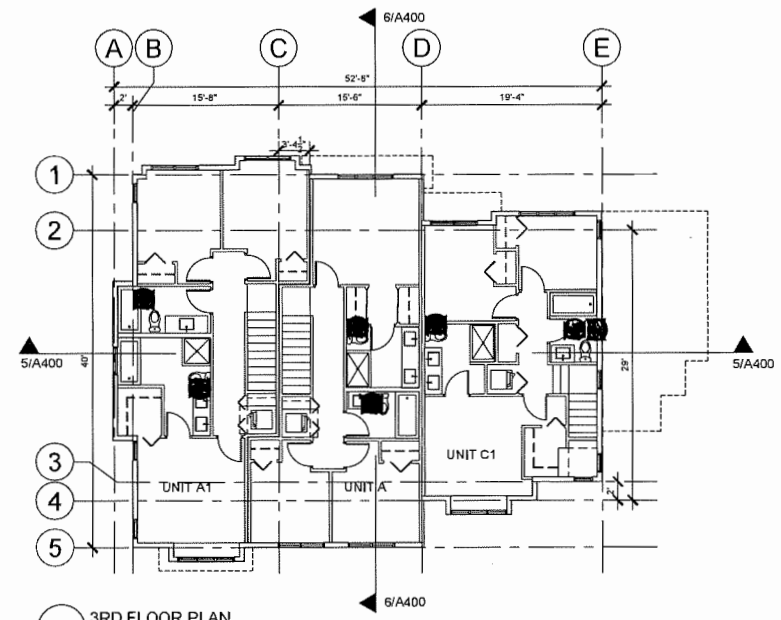

3 3RD FLOOR PLAN
1/8" = 1'-0"

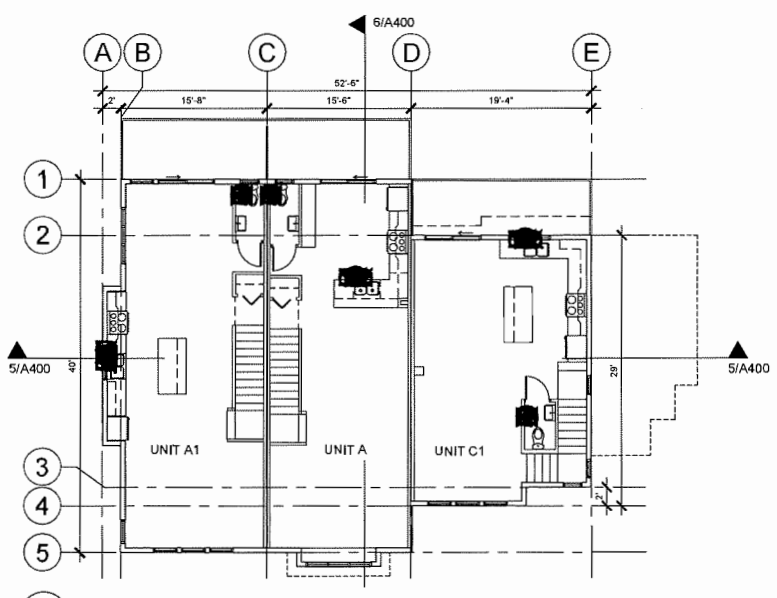

2 2ND FLOOR PLAN
1/8" = 1'-0"

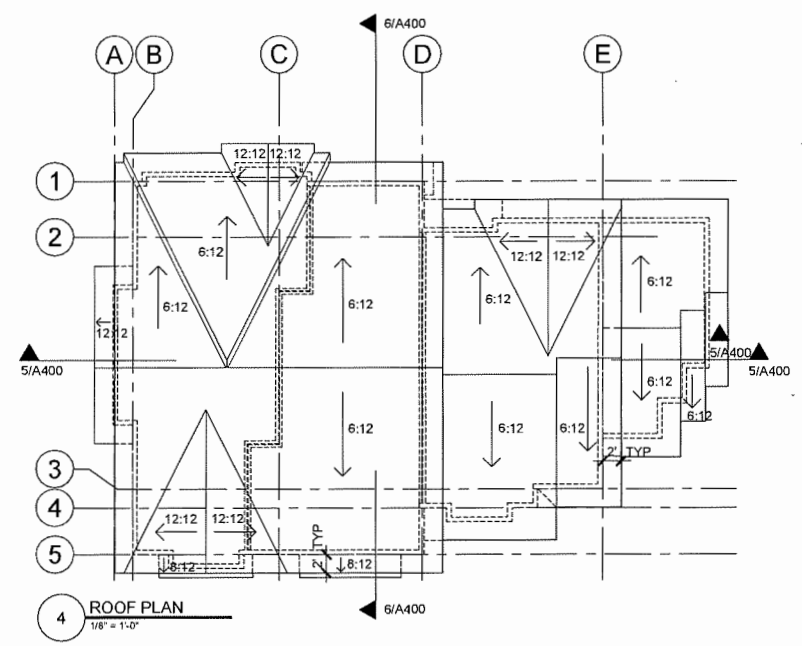

4 ROOF PLAN
1/8" = 1'-0"

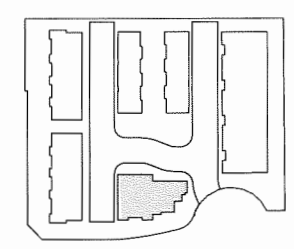

This drawings must not be scaled. The General Contractor shall verify all dimensions, datums and levels prior to commencement of work. All errors and omissions to be reported immediately to the Architect. Variations and modifications to work shown shall not be carried out without the written permission from the Architect. Copyright reserved. These drawings and the design are, and at all times remain, the exclusive property of the Architect, and cannot be used and/or reproduced without the consent of the Architect, in which case the reproduction must bear their name as the Architect.

DRAWING ISSUES

1	DEC 22,2016	ISSUE FOR REZONING
2	APR 4, 2017	RE-ISSUE FOR REZONING
3	JUL 19, 2017	ISSUE FOR DEVELOPMENT PERMIT
4	MAR 9, 2018	RE-ISSUE FOR DEVELOPMENT PERMIT

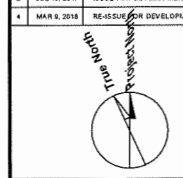

CONSULTANTS

CLIENT

REFINED PROPERTIES

engage ARCHITECTURE

ENGAGE ARCHITECTURE INC
B1 - 343 RAILWAY STREET
VANCOUVER BC V6A 1A4
T: 778-772-4034
www.engagearchitecture.ca

PROJECT# 16.15

SEAL

PROJECT

WESTMINSTER AT MCLEAN TOWNHOUSES

22720 AND 22740 WESTMINSTER HWY.
RICHMOND BC

DRAWING

BUILDING 1
FLOORPLANS

CHECKED BY:	DRAWN BY:
KS	KS
DATE: JULY 2016	SCALE: 1/8" = 1'-0"

DWG No.

A2-00

DP 17-781020 -7

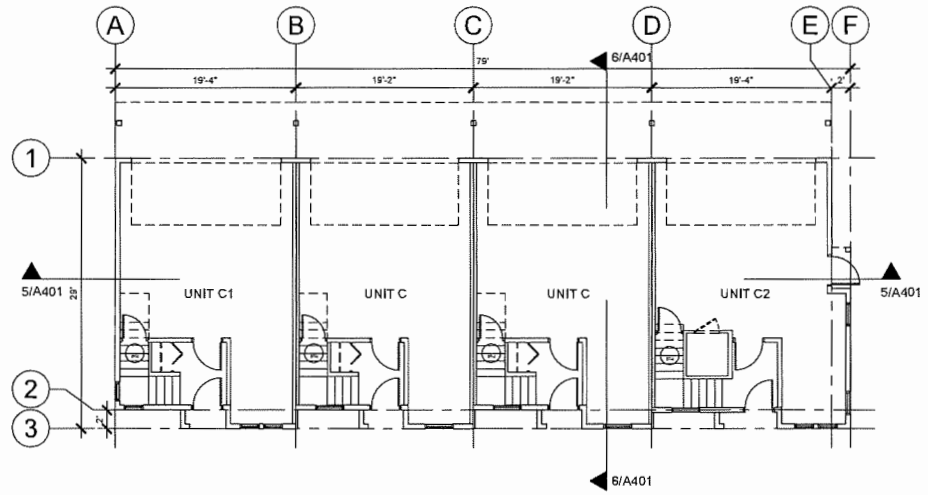

1 GROUND FLOOR PLAN
1/8" = 1'-0"

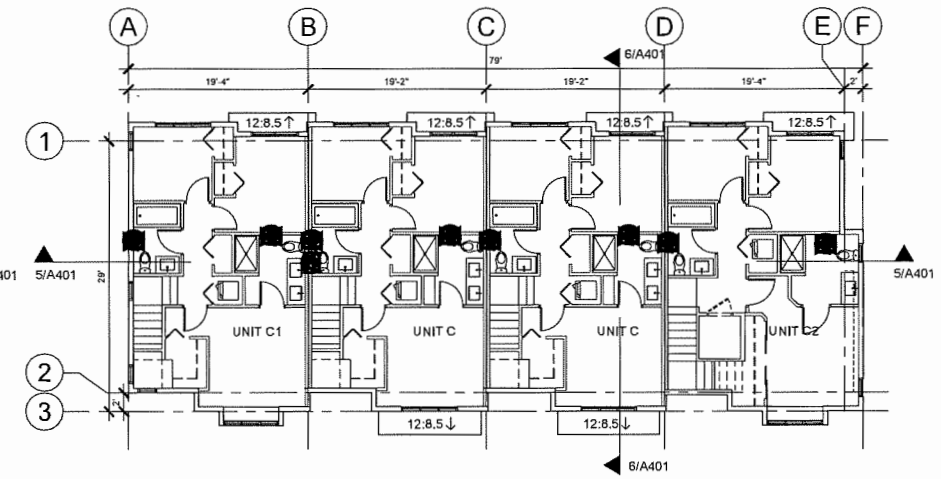

3 3RD FLOOR PLAN
1/8" = 1'-0"

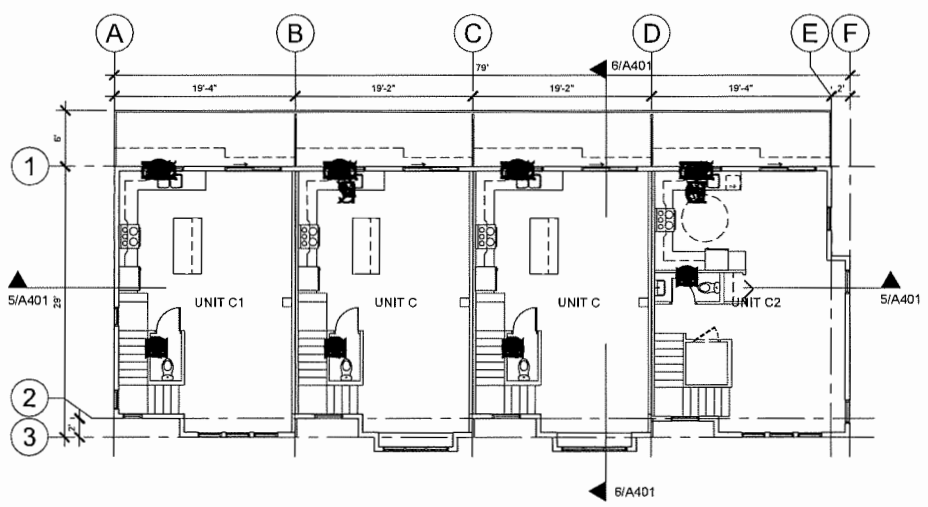

2 2ND FLOOR PLAN
1/8" = 1'-0"

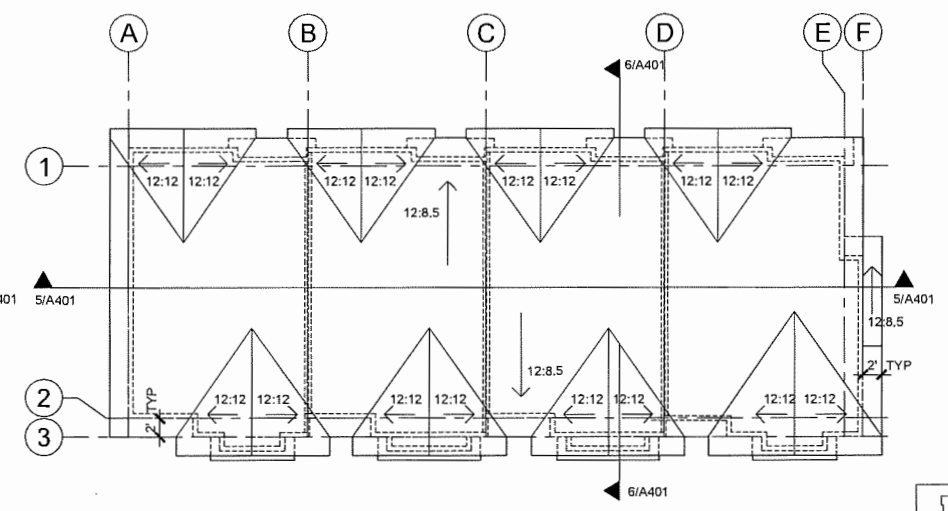

4 ROOF PLAN
1/8" = 1'-0"

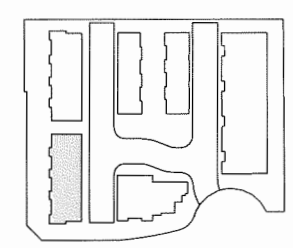

This drawings must not be scaled. The General Contractor shall verify all dimensions, datums and levels prior to commencement of work. All errors and omissions to be reported immediately to the Architect. Variations and modifications to work shown shall not be carried out without the written permission from the Architect. Copyright reserved. These drawings and the design are, and at all times remain, the exclusive property of the Architect, and cannot be used and/or reproduced without the consent of the Architect, in which case the reproduction must bear their name as the Architect.

DRAWING ISSUES

1	DEC.22.2016	ISSUE FOR REZONING
2	APR 4, 2017	RE-ISSUE FOR REZONING
3	JUL 19, 2017	ISSUE FOR DEVELOPMENT PERMIT
4	MAR 9, 2018	RE-ISSUE FOR DEVELOPMENT PERMIT

True North
Project North

CONSULTANTS

CLIENT

REFINED PROPERTIES

engage ARCHITECTURE

ENGAGE ARCHITECTURE INC
B1 - 343 RAILWAY STREET
VANCOUVER BC V6A 1A4
T: 778-772-4034
www.engagearchitecture.ca

PROJECT# 16.15

SEAL

PROJECT
WESTMINSTER AT MCLEAN TOWNHOUSES
22720 AND 22740 WESTMINSTER HWY.
RICHMOND BC

DRAWING
BUILDING 2
FLOORPLANS

CHECKED BY:	DRAWN BY:
KS	KS
DATE: JULY 2016	SCALE: 1/8" = 1'-0"

DWG No.
A2-01

DP 17-781050-8

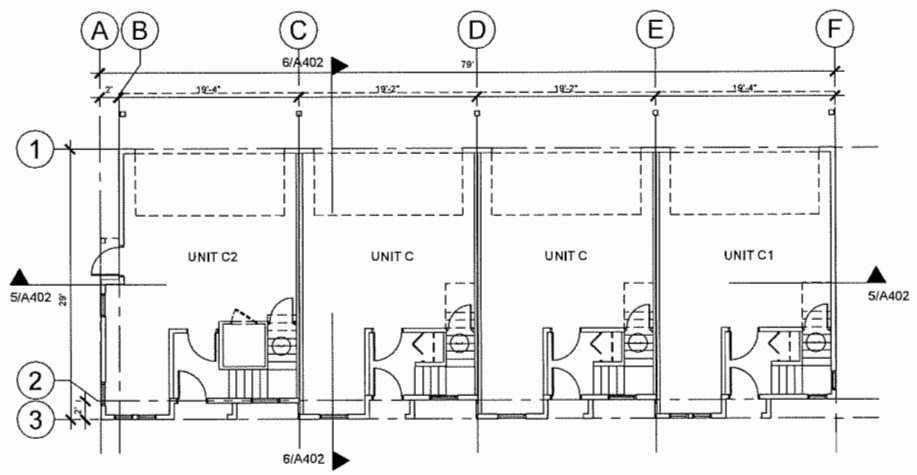

1 GROUND FLOOR PLAN
1/8" = 1'-0"

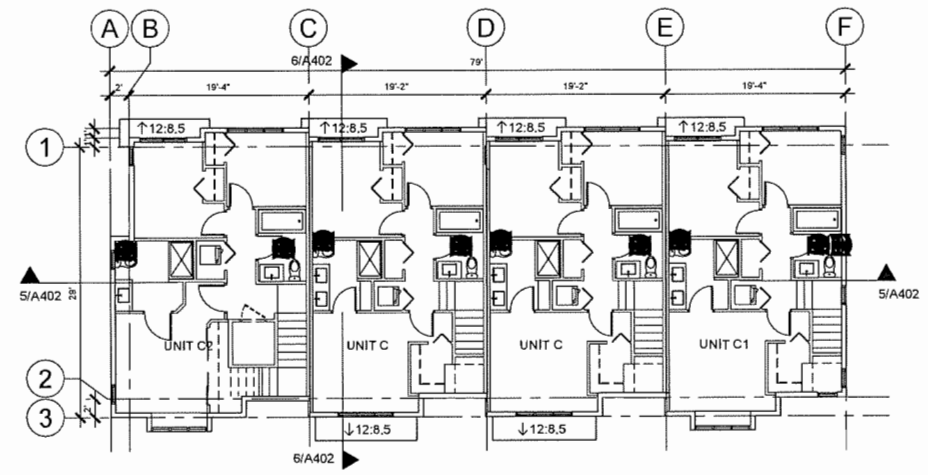

3 3RD FLOOR PLAN
1/8" = 1'-0"

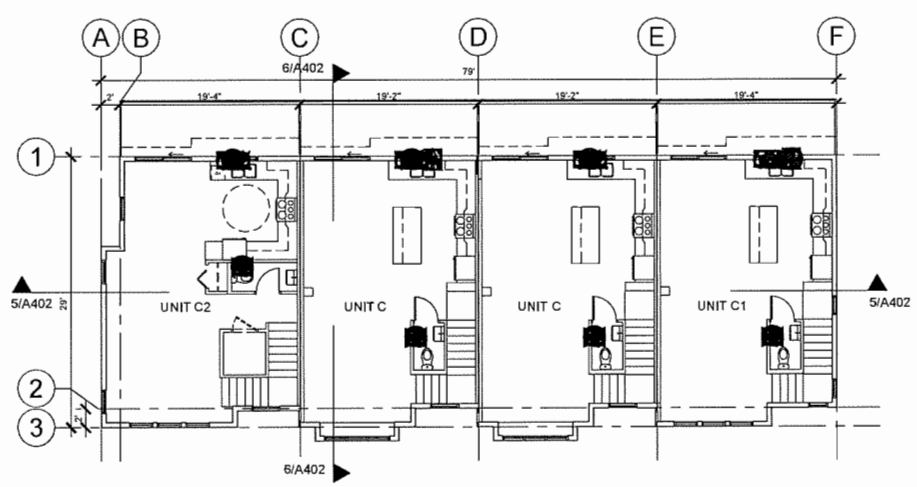

2 2ND FLOOR PLAN
1/8" = 1'-0"

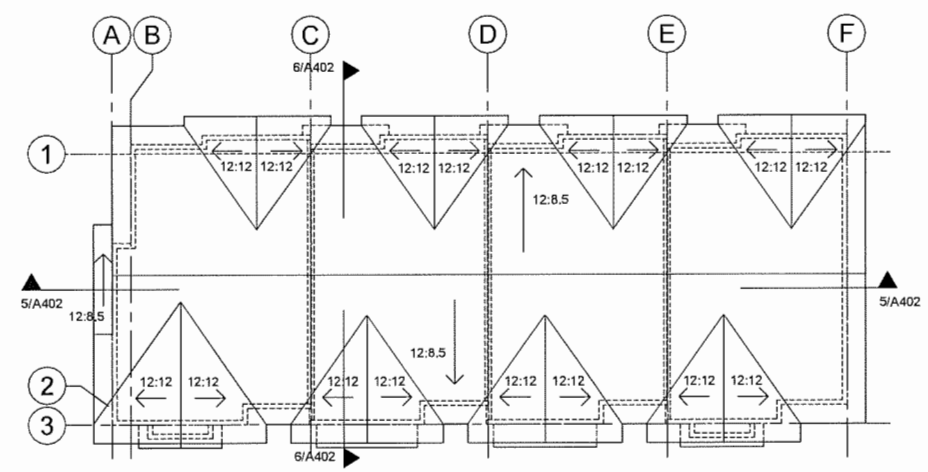

4 ROOF PLAN
1/8" = 1'-0"

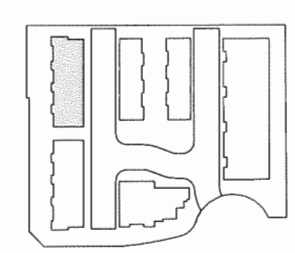

This drawings must not be scaled. The General Contractor shall verify all dimensions, datums and levels prior to commencement of work. All errors and omissions to be reported immediately to the Architect. Variations and modifications to work shown shall not be carried out without the written permission from the Architect. Copyright reserved. These drawings and the design are, and at all times remain, the exclusive property of the Architect, and cannot be used and/or reproduced without the consent of the Architect, in which case the reproduction must bear their name as the Architect.

DRAWING ISSUES

1	DEC.22.2016	ISSUE FOR REZONING
2	APR 4 ,2017	RE-ISSUE FOR REZONING
3	JUL 19, 2017	ISSUE FOR DEVELOPMENT PERMIT
4	MAR 9, 2018	RE-ISSUE FOR DEVELOPMENT PERMIT

True North
Project North

CONSULTANTS

CLIENT

REFINED

engage ARCHITECTURE

ENGAGE ARCHITECTURE INC
B1 - 343 RAILWAY STREET
VANCOUVER BC V6A 1A4
T: 778-772-4034
www.engagearchitecture.ca

PROJECT# 16.15

SEAL

PROJECT
WESTMINSTER AT MCLEAN TOWNHOUSES
22720 AND 22740 WESTMINSTER HWY.
RICHMOND BC

DRAWING
BUILDING 3
FLOORPLANS

CHECKED BY:	DRAWN BY:
KS	KS
DATE: JULY 2016	SCALE: 1/8" = 1'-0"

DWG No.
A2-02

DP 17-781050-9

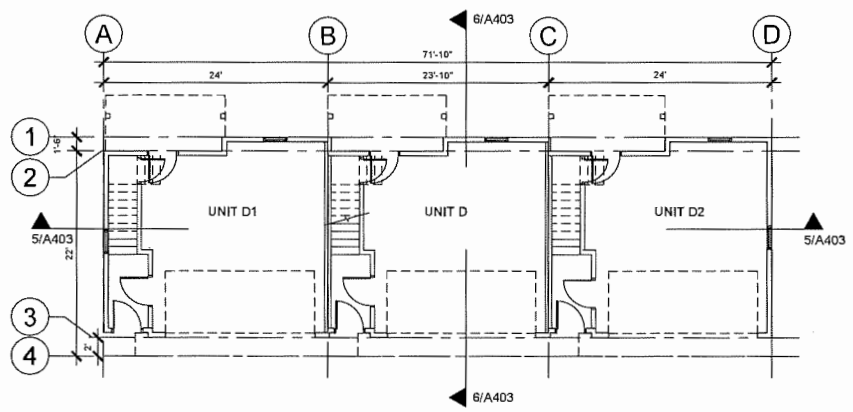

1 GROUND FLOOR PLAN
1/8" = 1'-0"

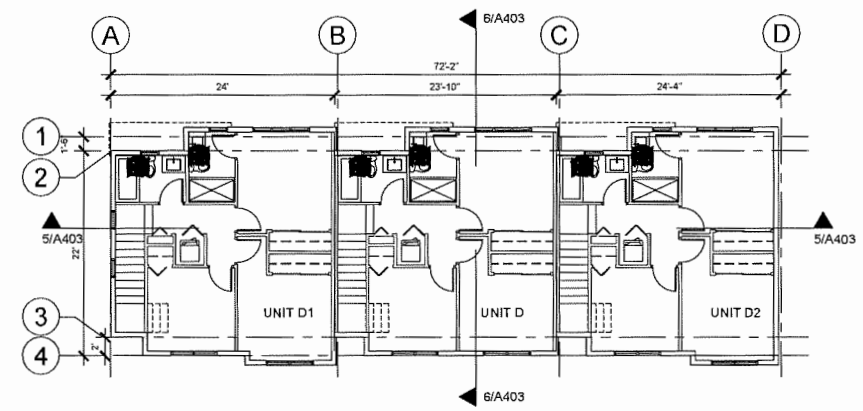

3 3RD FLOOR PLAN
1/8" = 1'-0"

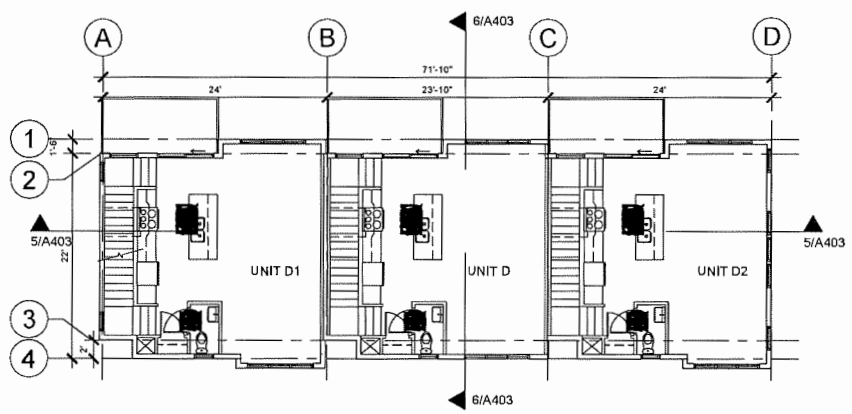

2 2ND FLOOR PLAN
1/8" = 1'-0"

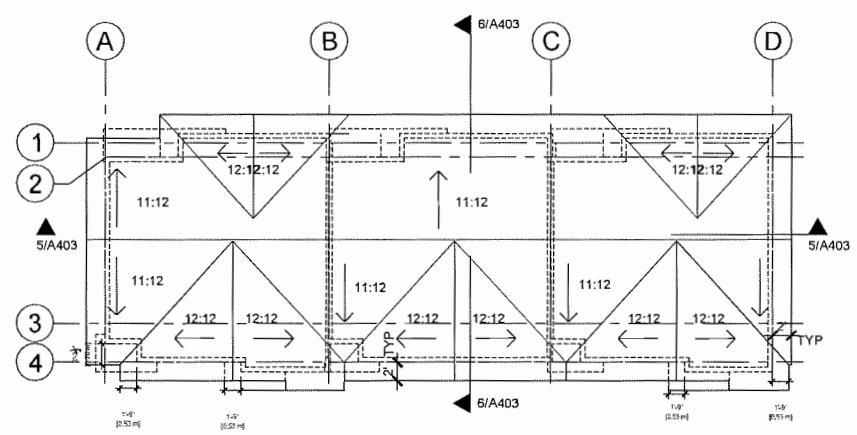

4 ROOF PLAN
1/8" = 1'-0"

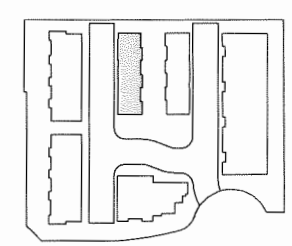

This drawings must not be scaled. The General Contractor shall verify all dimensions, datums and levels prior to commencement of work. All errors and omissions to be reported immediately to the Architect. Variations and modifications to work shown shall not be carried out without the written permission from the Architect. Copyright reserved. These drawings and the design are, and at all times remain, the exclusive property of the Architect, and cannot be used and/or reproduced without the consent of the Architect, in which case the reproduction must bear their name as the Architect.

DRAWING ISSUES

1	DEC 22,2016	ISSUE FOR REZONING
2	APR 4, 2017	RE-ISSUE FOR REZONING
3	JUL 13, 2017	ISSUE FOR DEVELOPMENT PERMIT
4	MAR 8, 2018	RE-ISSUE FOR DEVELOPMENT PERMIT

True North
Project North

CONSULTANTS

CLIENT

REFINED

engage ARCHITECTURE

ENGAGE ARCHITECTURE INC
B1 - 343 RAILWAY STREET
VANCOUVER BC V6A 1A4
T: 778-772-4034
www.engagearchitecture.ca

PROJECT# 16.15

SEAL

PROJECT
WESTMINSTER AT MCLEAN TOWNHOUSES
22720 AND 22740 WESTMINSTER HWY.
RICHMOND BC

DRAWING
BUILDING 4
FLOORPLANS

CHECKED BY:	DRAWN BY:
KS	KS
DATE: JULY 2016	SCALE: 1/8" = 1'-0"

DWG No.
A2-03

DP 17-781050-10

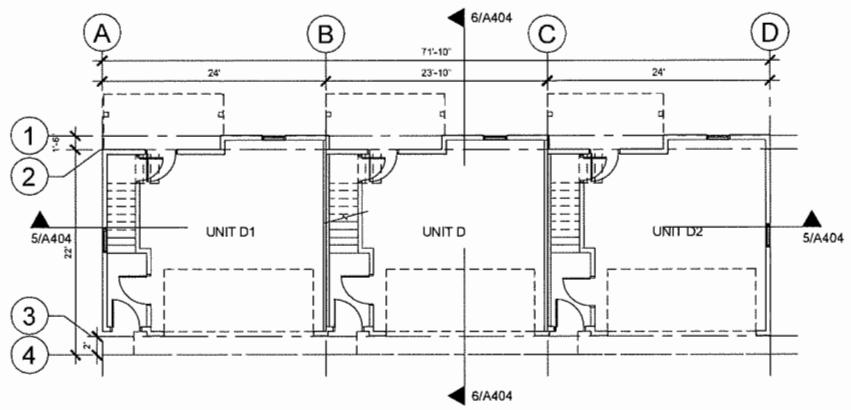

1 GROUND FLOOR PLAN
1/8" = 1'-0"

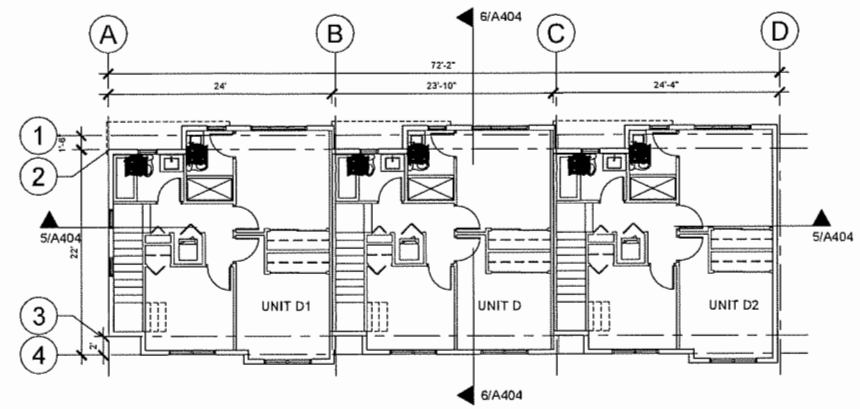

3 3RD FLOOR PLAN
1/8" = 1'-0"

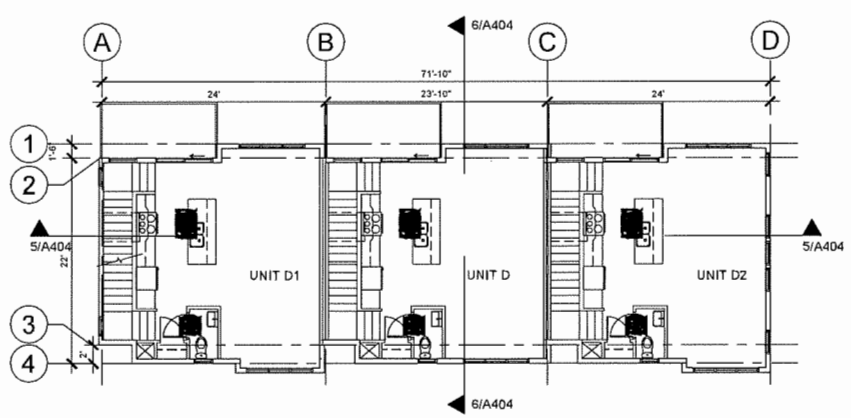

2 2ND FLOOR PLAN
1/8" = 1'-0"

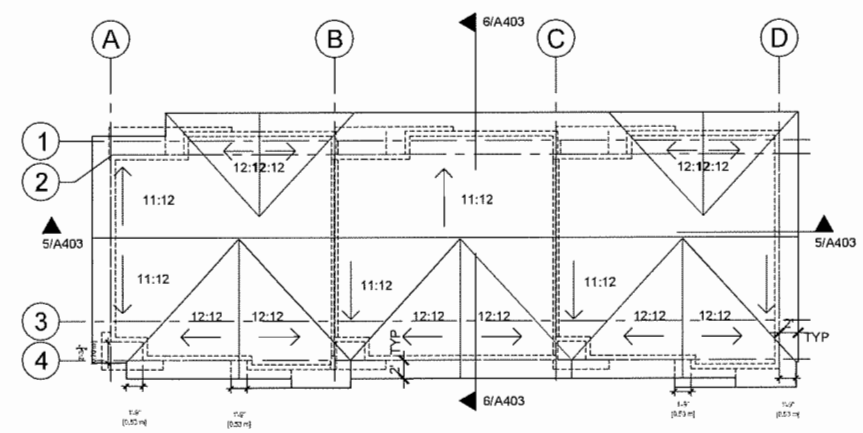

4 ROOF PLAN
1/8" = 1'-0"

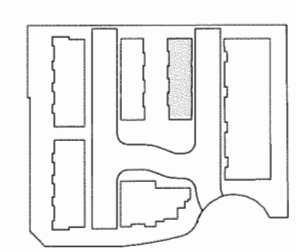

This drawings must not be scaled. The General Contractor shall verify all dimensions, datums and levels prior to commencement of work. All errors and omissions to be reported immediately to the Architect. Variations and modifications to work shown shall not be carried out without the written permission from the Architect. Copyright reserved. These drawings and the design are, and at all times remain, the exclusive property of the Architect, and cannot be used and/or reproduced without the consent of the Architect, in which case the reproduction must bear their name as the Architect.

DRAWING ISSUES

1	DEC 22,2016	ISSUE FOR REZONING
2	APR 4 ,2017	RE-ISSUE FOR REZONING
3	JUL 19, 2017	ISSUE FOR DEVELOPMENT PERMIT
4	MAR 8, 2018	RE-ISSUE FOR DEVELOPMENT PERMIT

True North
Project North

CONSULTANTS

CLIENT

REFINED BUSINESS

engage ARCHITECTURE

ENGAGE ARCHITECTURE INC
B1 - 343 RAILWAY STREET
VANCOUVER BC V6A 1A4
T: 778-772-4034
www.engagearchitecture.ca

PROJECT# 16.15

SEAL

PROJECT
WESTMINSTER AT MCLEAN TOWNHOUSES
22720 AND 22740 WESTMINSTER HWY.
RICHMOND BC

DRAWING
BUILDING 5
FLOORPLANS

CHECKED BY:	DRAWN BY:
KS	KS
DATE: JULY 2016	SCALE: 1/8" = 1'-0"

DWG No.
A2-04

DP 17-781050-11

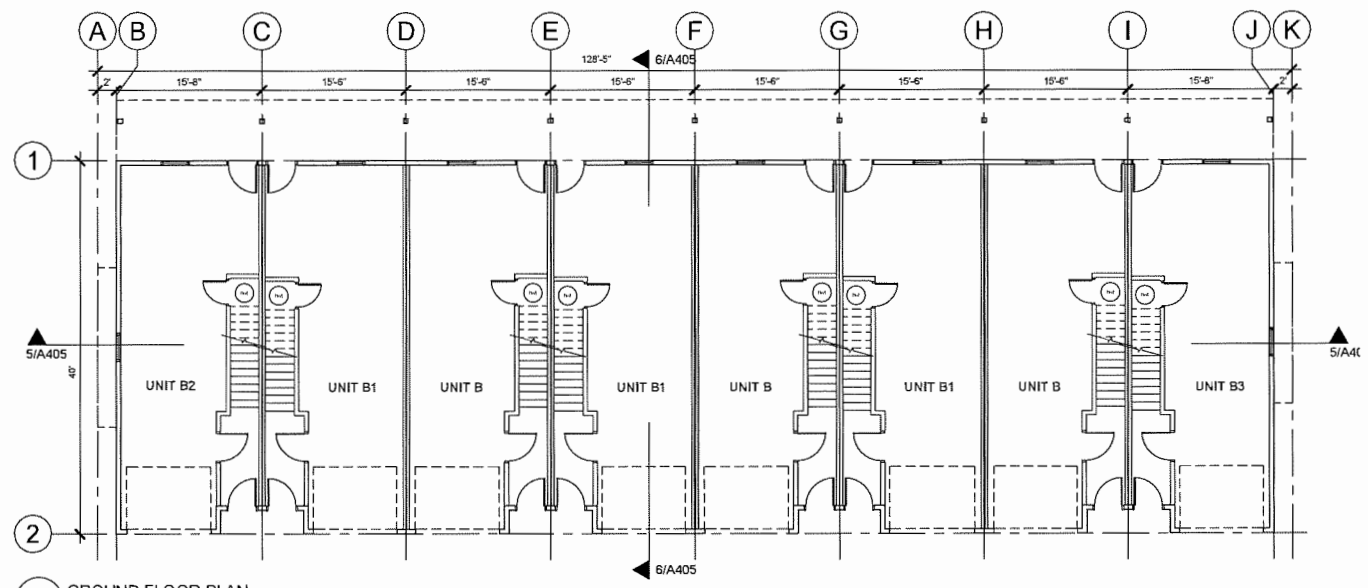

1 GROUND FLOOR PLAN
1/8" = 1'-0"

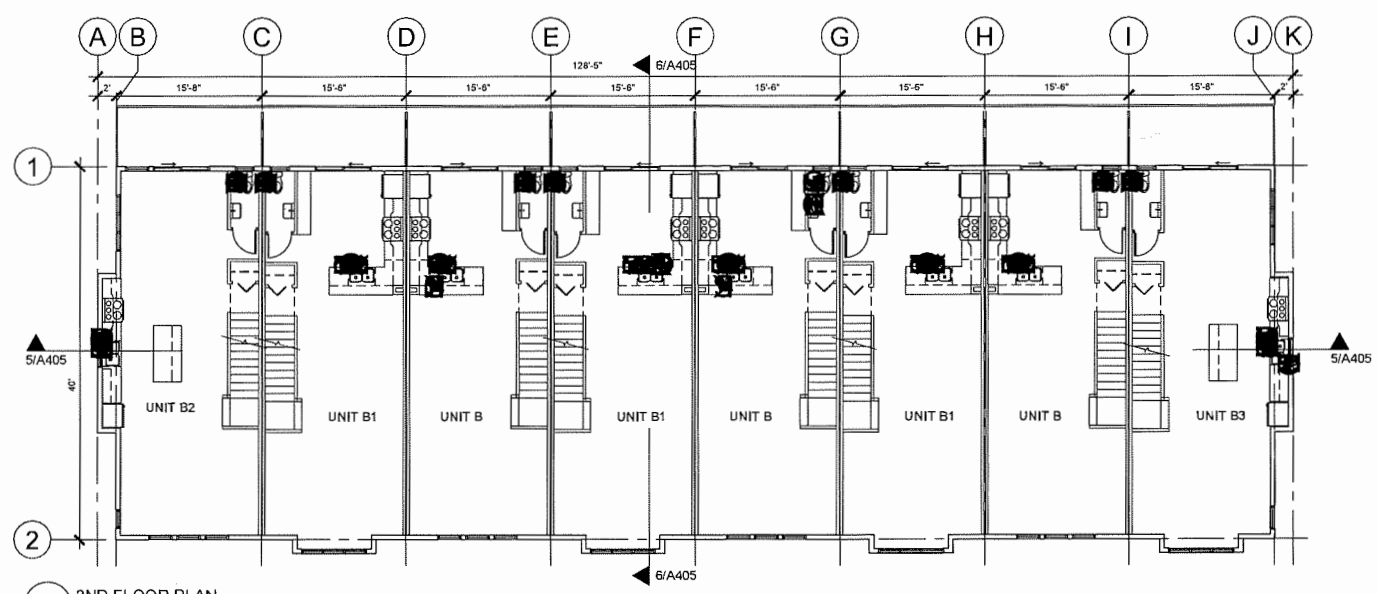

2 2ND FLOOR PLAN
1/8" = 1'-0"

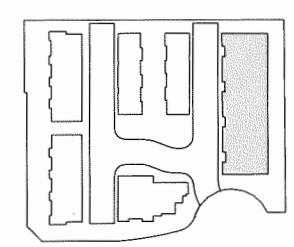

This drawings must not be scaled. The General Contractor shall verify all dimensions, datums and levels prior to commencement of work. All errors and omissions to be reported immediately to the Architect. Variations and modifications to work shown shall not be carried out without the written permission from the Architect. Copyright reserved. These drawings and the design are, and at all times remain, the exclusive property of the Architect, and cannot be used and/or reproduced without the consent of the Architect, in which case the reproduction must bear their name as the Architect.

DRAWING ISSUES

1	DEC 22,2016	ISSUE FOR REZONING
2	APR 4, 2017	RE-ISSUE FOR REZONING
3	JUL 19, 2017	ISSUE FOR DEVELOPMENT PERMIT
4	MAR 9, 2018	RE-ISSUE FOR DEVELOPMENT PERMIT

True North
Project North

CONSULTANTS

CLIENT

REFINED

engage ARCHITECTURE

ENGAGE ARCHITECTURE INC
B1 - 343 RAILWAY STREET
VANCOUVER BC V6A 1A4
T: 778-772-4034
www.engagearchitecture.ca

PROJECT# 16.15

SEAL

PROJECT
WESTMINSTER AT MCLEAN TOWNHOUSES
22720 AND 22740 WESTMINSTER HWY.
RICHMOND BC

DRAWING
BUILDING 6
FLOORPLANS

CHECKED BY:	DRAWN BY:
KS	KS
DATE: JULY 2016	SCALE: 1/8" = 1'-0"

DWG No.
A2-05

DP 17-781050-12

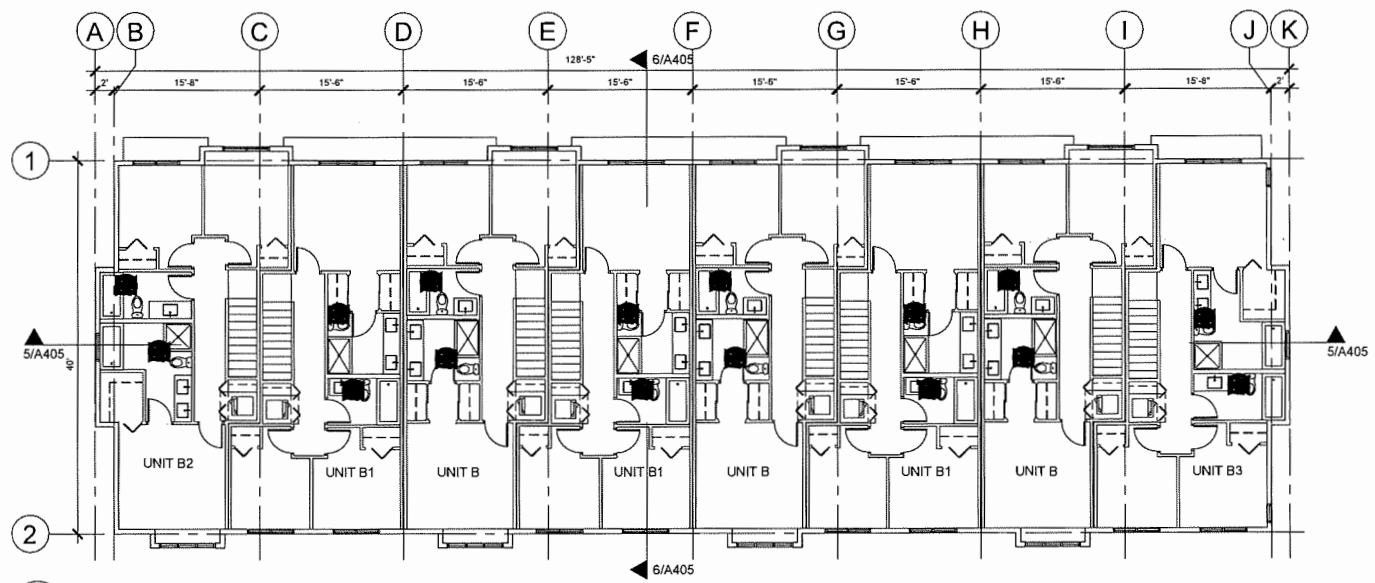

3 3RD FLOOR PLAN
1/8" = 1'-0"

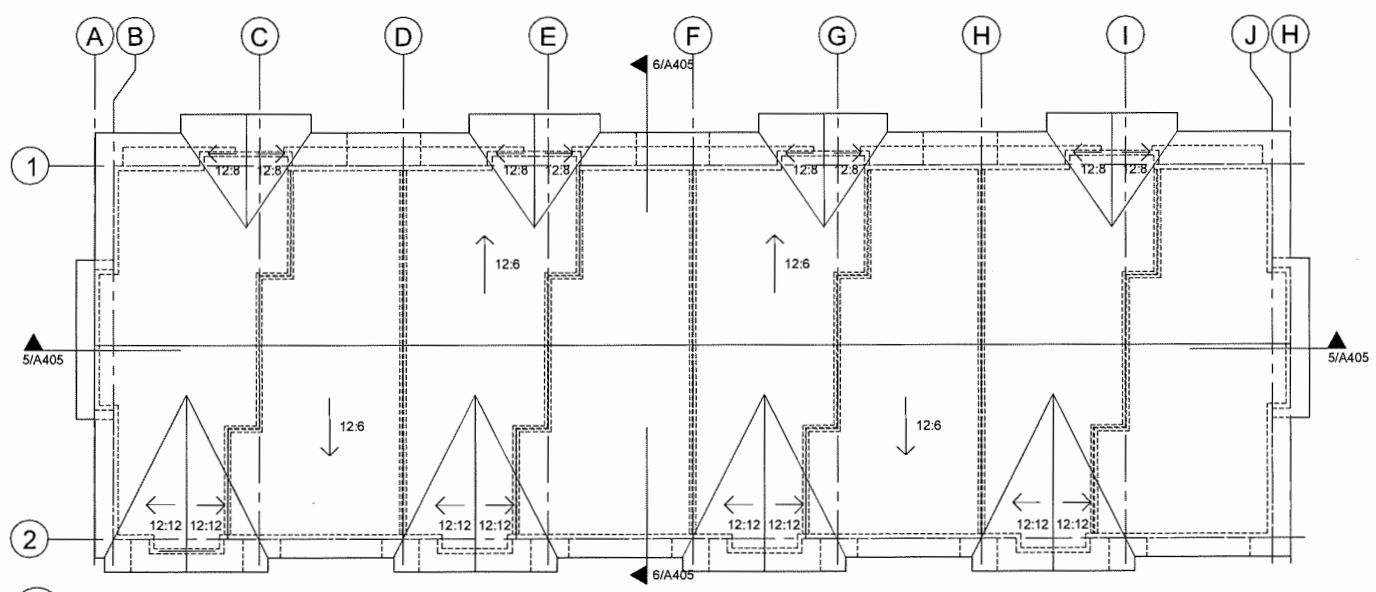

4 ROOF PLAN
1/8" = 1'-0"

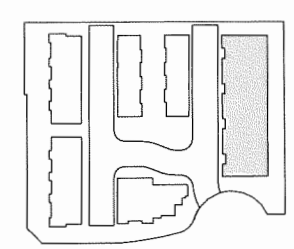

This drawings must not be scaled. The General Contractor shall verify all dimensions, datums and levels prior to commencement of work. All errors and omissions to be reported immediately to the Architect. Variations and modifications to work shown shall not be carried out without the written permission from the Architect. Copyright reserved. These drawings and the design are, and at all times remain, the exclusive property of the Architect, and cannot be used and/or reproduced without the consent of the Architect, in which case the reproduction must bear their name as the Architect.

DRAWING ISSUES

1	DEC 22,2016	ISSUE FOR REZONING
2	APR 4 ,2017	RE-ISSUE FOR REZONING
3	JUL 19, 2017	ISSUE FOR DEVELOPMENT PERMIT
4	MAR 9, 2018	RE-ISSUE FOR DEVELOPMENT PERMIT

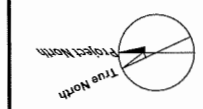

CONSULTANTS

CLIENT

REFINED PROPERTIES

engage ARCHITECTURE

ENGAGE ARCHITECTURE INC
B1 - 343 RAILWAY STREET
VANCOUVER BC V6A 1A4
T: 778-772-4034
www.engagearchitecture.ca

PROJECT# 16.15

SEAL

PROJECT
WESTMINSTER AT MCLEAN TOWNHOUSES
22720 AND 22740 WESTMINSTER HWY.
RICHMOND BC

DRAWING
BUILDING 6
FLOORPLANS

CHECKED BY:	DRAWN BY:
KS	KS
DATE: JULY 2016	SCALE: 1/8" = 1'-0"

DWG No.
A2-05.1

DP 17-781050-13

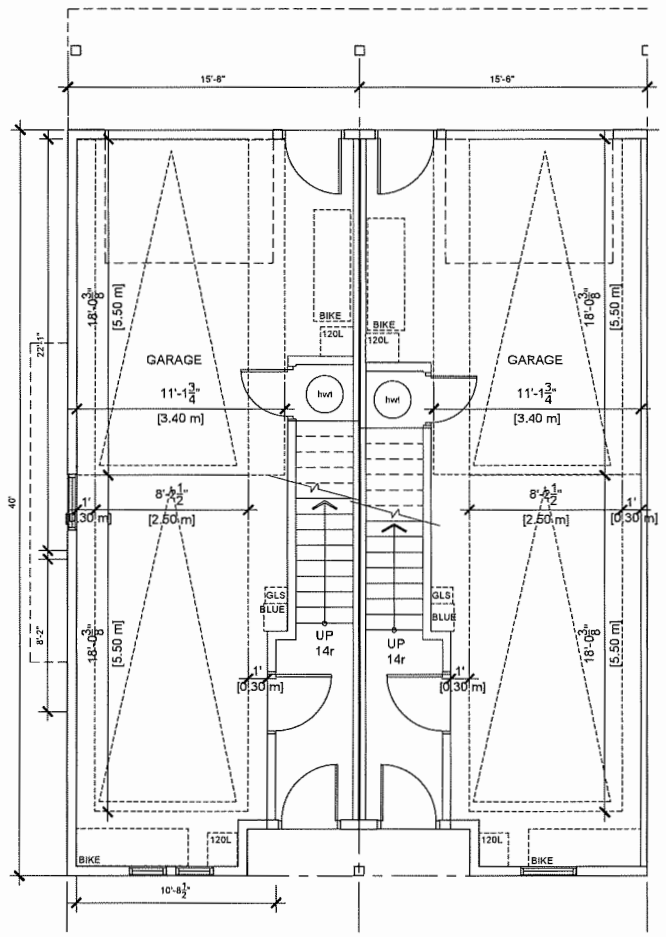

Ground Level
A1 (end)
Net: 0 sf
Exempt: Garage 515.4 sf
Entry/stairs 96.3 sf
Gross: 611.7 sf

Ground Level
A
Net: 0 sf
Exempt: Garage 510.8 sf
Entry/stairs 94.8 sf
Gross: 605.0 sf

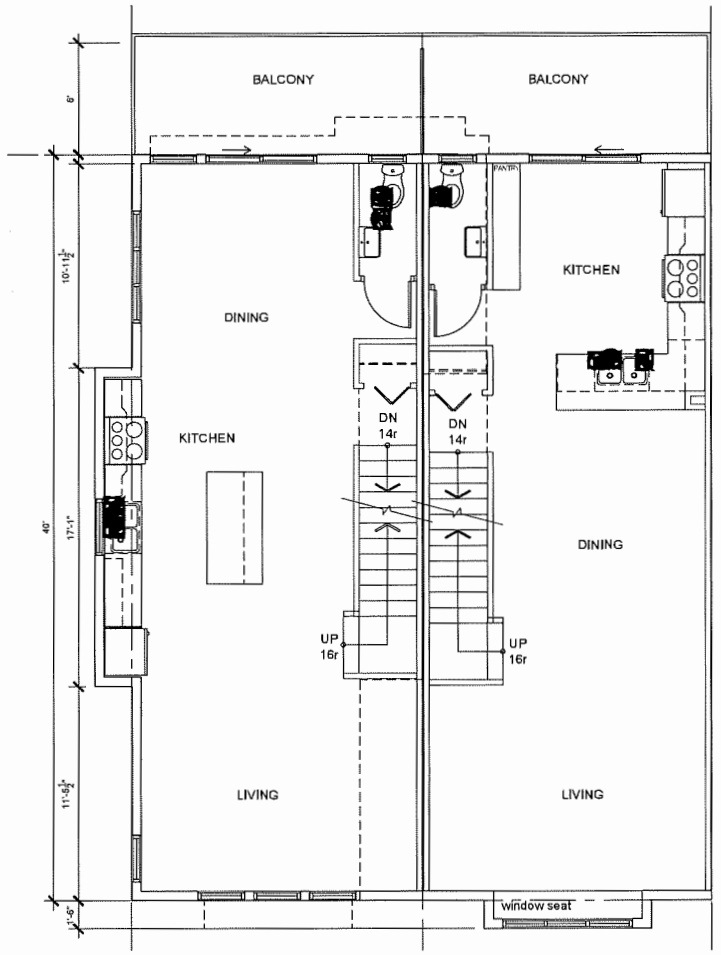

2nd Level
A1 (end)
Net: 649.5 sf
Exempt Stairs:11.3 sf
Gross: 660.8 sf

2nd Level
A
Net: 620.7 sf
Exempt Stairs:12.8sf
Gross: 633.5 sf

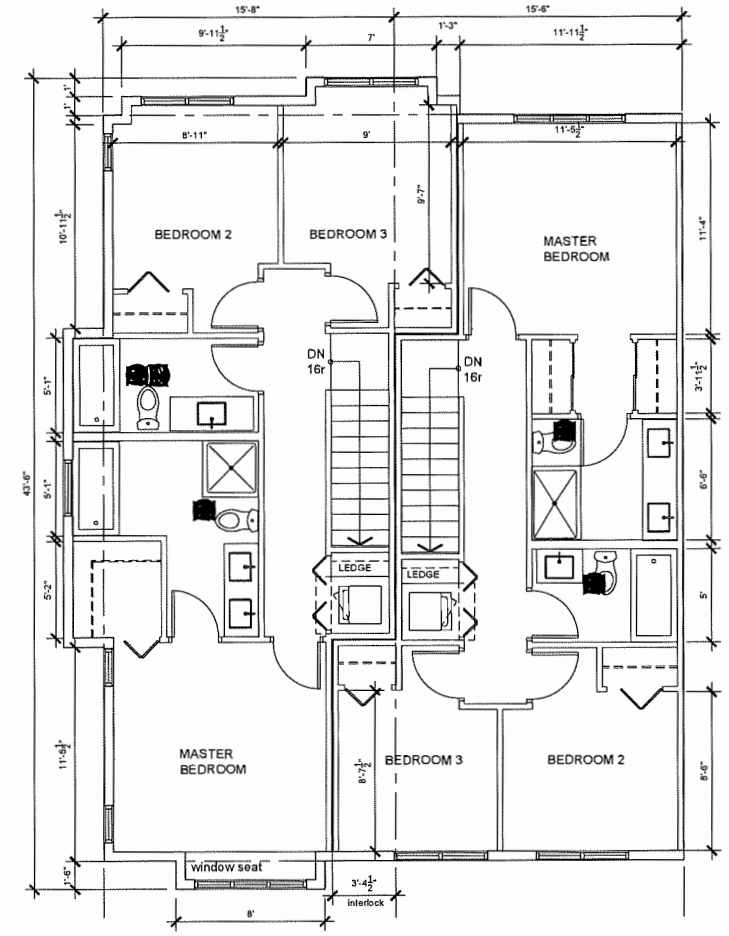

3rd Level
A1 (end)
Net: 665.4 sf
Exempt: 35.3 sf
Gross: 700.7 sf

3rd Level
A
Net: 584.8 sf
Exempt Stairs: 35.3 sf
Gross: 620.1 sf

Unit A
NET AREA:1205.5 sf
/GROSS AREA: 1858.6 sf

Unit A1
NET AREA:1314.9 sf
/GROSS AREA:1973.2 sf

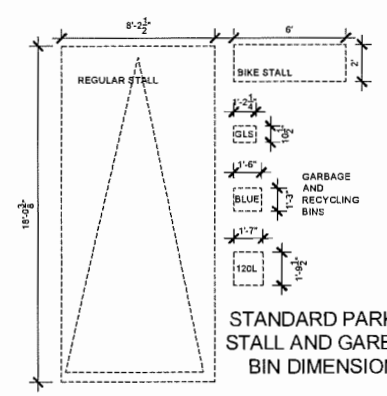

STANDARD PARKING
STALL AND GARBAGE
BIN DIMENSIONS

NOTES:
1. ALL UNITS WILL INCORPORATE FEATURES FOR AGING IN PLACE WHICH INCLUDE HAND RAILS AT ALL STAIRS, LEVER TYPE DOOR HANDLES AND PLUMBING FIXTURE CONTROLS THROUGHOUT AND SOLID BLOCKING AT TUBS/ SHOWERS AND BEHIND AND/OR BESIDE TOILETS IN ALL BATH AND POWDER ROOMS.
2. FLOOR AREA IS MEASURED TO THE OUTSIDE (FACE OF SHEATHING) OF EXTERIOR WALLS AND TO THE CENTRELINE OF PARTY (SUITE DEMISING) WALLS. CALCULATION OF FSR AS NOTED IS CALCULATED PER SECTION 4.4 OF THE ZONING AND DEVELOPMENT BYLAW. PER THIS SECTION, IT EXCLUDES UP TO 50 m2 (538 SF) PER UNIT FOR ON SITE PARKING (HERE NOTED AS GARAGE) AND UP TO 10 m2 (107.6 SF) PER UNIT FOR STAIRCASES ON THE FIRST 2 LEVELS AND THE INTERIOR ENTRY AREA ADJACENT TO THE STAIRS (NOTED HERE AS ENTRY/STAIR EXEMPTION AT LEVEL 1 AND STAIR EXEMPTION AT LEVEL 2).
3. ALL OF THE RESIDENT PARKING STALLS WILL BE EQUIPPED WITH 120V ELECTRIC PLUG-INS AND AN ADDITIONAL 25% OF THE RESIDENT PARKING STALLS WILL BE PRE-DUCTED FOR FUTURE WIRING TO ACCOMMODATE THE FUTURE INSTALLATION OF SPECIALIZED ELECTRIC VEHICLE CHARGING EQUIPMENT.
4. ALL BUILDINGS WILL BE DESIGNED TO MEET THE BC SOLAR HOT WATER READY REGULATION.

This drawings must not be scaled. The General Contractor shall verify all dimensions, datums and levels prior to commencement of work. All errors and omissions to be reported immediately to the Architect. Variations and modifications to work shown shall not be carried out without the written permission from the Architect. Copyright reserved. These drawings and the design are, and at all times remain, the exclusive property of the Architect, and cannot be used and/or reproduced without the consent of the Architect, in which case the reproduction must bear their name as the Architect.

DRAWING ISSUES

1	DEC 22,2016	ISSUE FOR REZONING
2	APR 4, 2017	RE-ISSUE FOR REZONING
3	JUL 19, 2017	ISSUE FOR DEVELOPMENT PERMIT
4	MAR 9, 2018	RE-ISSUE FOR DEVELOPMENT PERMIT

CONSULTANTS

CLIENT
REFINED

engage
ARCHITECTURE

ENGAGE ARCHITECTURE INC
B1 - 343 RAILWAY STREET
VANCOUVER BC V6A 1A4
T: 778-772-4034
www.engagearchitecture.ca

PROJECT# 16.15

SEAL

PROJECT
WESTMINSTER AT MCLEAN TOWNHOUSES
22720 AND 22740 WESTMINSTER HWY.
RICHMOND BC

DRAWING
UNIT PLANS
A AND A1

CHECKED BY:	DRAWN BY:
KS	KS
DATE: JULY 2016	SCALE: 1/4" = 1'-0"

DWG No.
A3-00

DP 17-781050-14

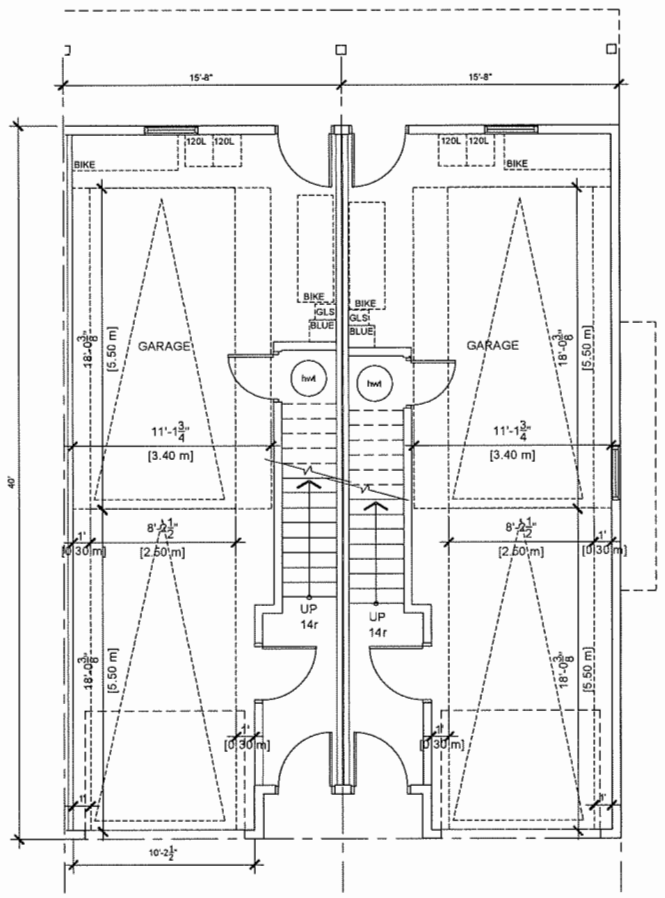

Ground Level
B
Net: 0 sf
Exempt: Garage 519.2 sf
Entry/stairs 96.3 sf
Gross: 615.5 sf

Ground Level
B3 (end)
Net: 0 sf
Exempt: Garage 520.7 sf
Entry/stairs 94.8 sf
Gross: 615.5 sf

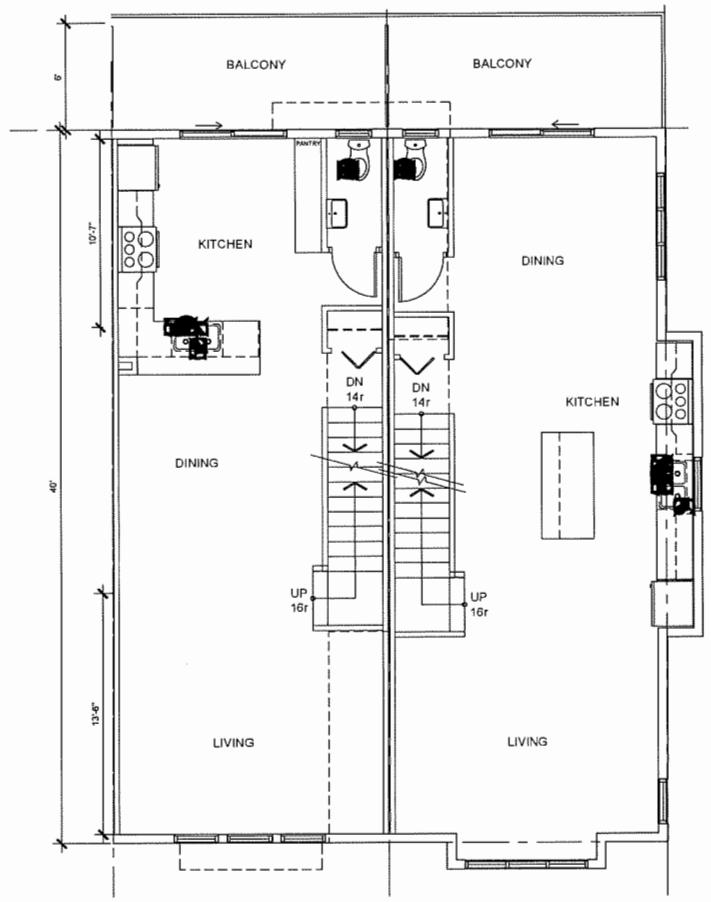

2nd Level
B
Net: 608.7 sf
Exempt Stairs:11.3 sf
Gross: 620.0 sf

2nd Level
B3 (end)
Net: 661.3 sf
Exempt Stairs: 12.8 sf
Gross: 674.3 sf

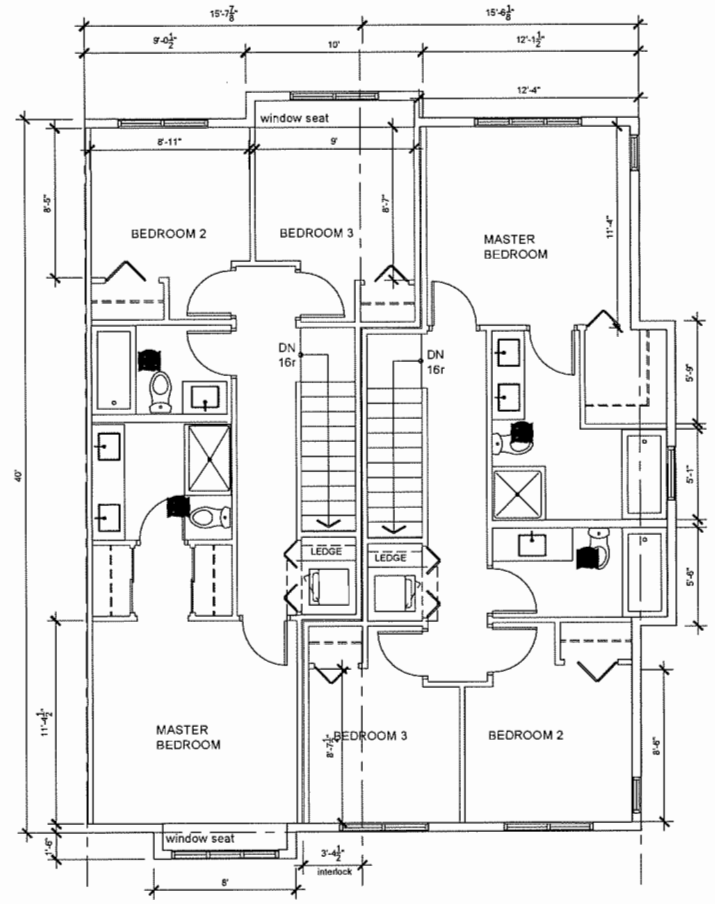

3rd Level
B
Net: 611.6 sf
Exempt Stairs: 35.3 sf
Gross: 646.9 sf

3rd Level
B3
Net: 621.5 sf
Exempt Stairs: 35.3 sf
Gross: 660.9 sf

Unit B
NET AREA:1220.3 sf
/GROSS AREA:1882.4 sf

Unit B3
NET AREA:1282.8 sf
/GROSS AREA: 1950.7 sf

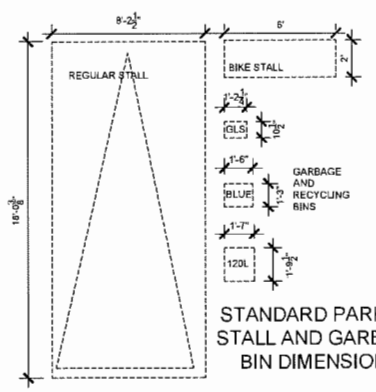

STANDARD PARKING
STALL AND GARBAGE
BIN DIMENSIONS

NOTES:
1. ALL UNITS WILL INCORPORATE FEATURES FOR AGING IN PLACE WHICH INCLUDE HAND RAILS AT ALL STAIRS, LEVER TYPE DOOR HANDLES AND PLUMBING FIXTURE CONTROLS THROUGHOUT AND SOLID BLOCKING AT TUBS/ SHOWERS AND BEHIND AND/OR BESIDE TOILETS IN ALL BATH AND POWDER ROOMS.
2. FLOOR AREA IS MEASURED TO THE OUTSIDE (FACE OF SHEATHING) OF EXTERIOR WALLS AND TO THE CENTRELINE OF PARTY (SUITE DEMISING) WALLS. CALCULATION OF FSR AS NOTED IS CALCULATED PER SECTION 4.4 OF THE ZONING AND DEVELOPMENT BYLAW. PER THIS SECTION, IT EXCLUDES UP TO 50 m2 (538 SF) PER UNIT FOR ON SITE PARKING (HERE NOTED AS GARAGE) AND UP TO 10 m2 (107.6 SF) PER UNIT FOR STAIRCASES ON THE FIRST 2 LEVELS AND THE INTERIOR ENTRY AREA ADJACENT TO THE STAIRS (NOTED HERE AS ENTRY/STAIR EXEMPTION AT LEVEL 1 AND STAIR EXEMPTION AT LEVEL 2).
3. ALL OF THE RESIDENT PARKING STALLS WILL BE EQUIPPED WITH 120V ELECTRIC PLUG-INS AND AN ADDITIONAL 25% OF THE RESIDENT PARKING STALLS WILL BE PRE-DUCTED FOR FUTURE WIRING TO ACCOMMODATE THE FUTURE INSTALLATION OF SPECIALIZED ELECTRIC VEHICLE CHARGING EQUIPMENT.
4. ALL BUILDINGS WILL BE DESIGNED TO MEET THE BC SOLAR HOT WATER READY REGULATION.

This drawings must not be scaled. The General Contractor shall verify all dimensions, datums and levels prior to commencement of work. All errors and omissions to be reported immediately to the Architect. Variations and modifications to work shown shall not be carried out without the written permission from the Architect. Copyright reserved. These drawings and the design are, and at all times remain, the exclusive property of the Architect, and cannot be used and/or reproduced without the consent of the Architect, in which case the reproduction must bear their name as the Architect.

DRAWING ISSUES

1	DEC 22,2016	ISSUE FOR REZONING
2	APR 4, 2017	RE-ISSUE FOR REZONING
3	JUL 19, 2017	ISSUE FOR DEVELOPMENT PERMIT
4	MAR 8, 2018	RE-ISSUE FOR DEVELOPMENT PERMIT

CONSULTANTS

CLIENT
REFINED PROPERTIES

engage ARCHITECTURE

ENGAGE ARCHITECTURE INC
B1 - 343 RAILWAY STREET
VANCOUVER BC V6A 1A4
T: 778-772-4034
www.engagearchitecture.ca

PROJECT# 16.15

SEAL

PROJECT
WESTMINSTER AT MCLEAN TOWNHOUSES
22720 AND 22740 WESTMINSTER HWY.
RICHMOND BC

DRAWING
UNIT PLANS
B AND B3

CHECKED BY:	DRAWN BY:
KS	KS
DATE: JULY 2016	SCALE: 1/4" = 1'-0"

DWG No
A3-01

DP 17-781050-15

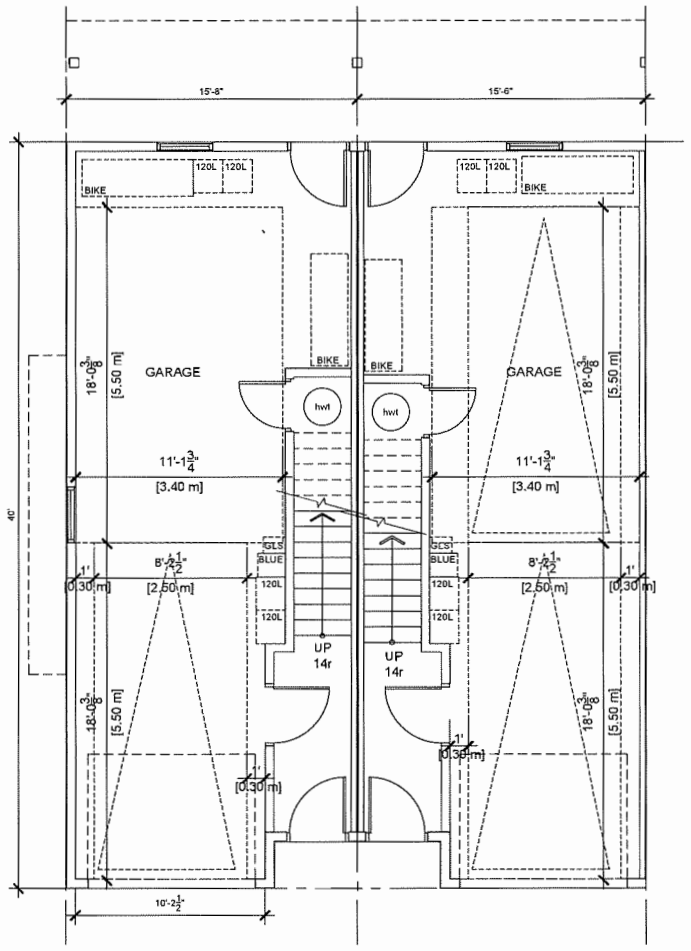

Ground Level
B2
Net: 0 sf
Exempt: Garage 518.9 sf
Entry/stairs 96.3 sf
Gross: 615.5 sf

Ground Level
B1
Net: 0 sf
Exempt: Garage 514.1 sf
Entry/stairs 94.8 sf
Gross: 608.9 sf

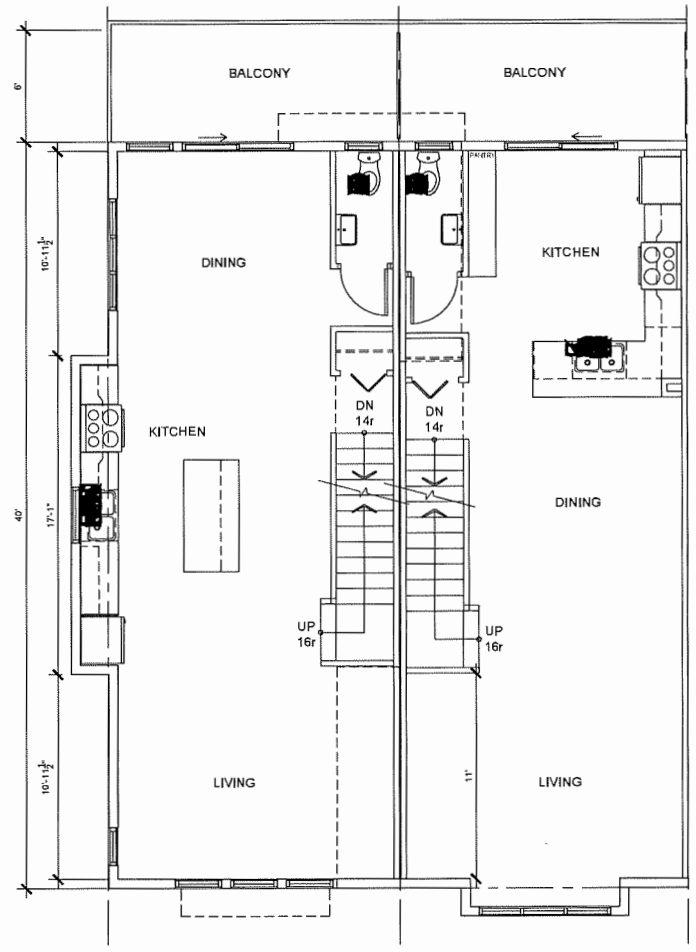

2nd Level
B2
Net: 649.5 sf
Exempt Stairs:11.3 sf
Gross: 660.8 sf

2nd Level
B1
Net: 620.7 sf
Exempt Stairs: 12.8 sf
Gross: 633.5 sf

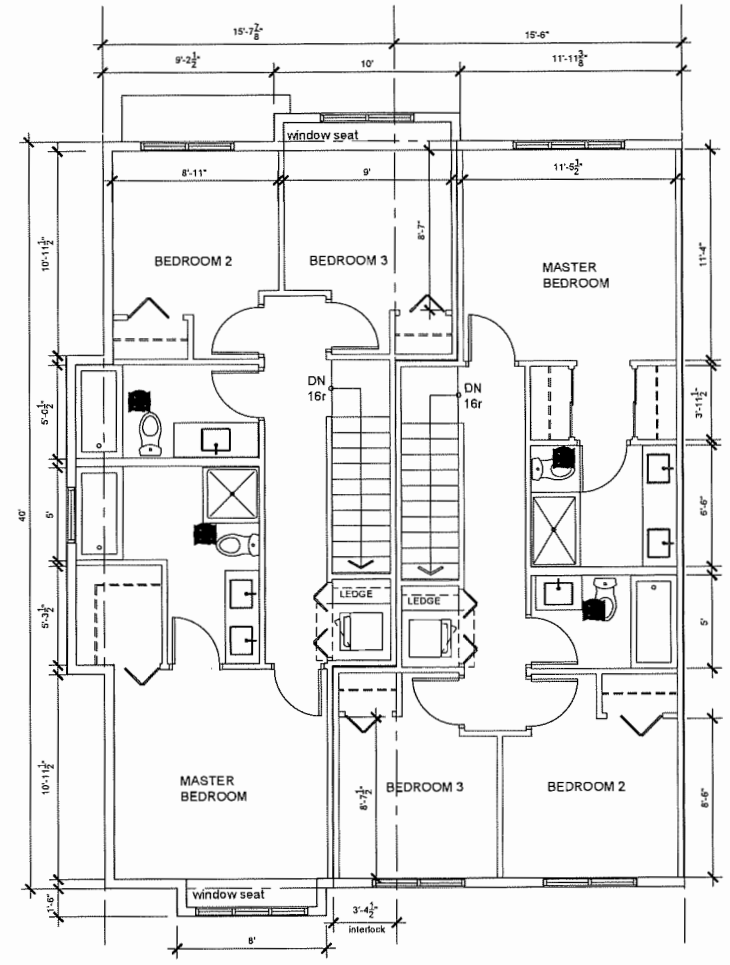

3rd Level
B2
Net: 651.7 sf
Exempt Stairs: 35.3 sf
Gross: 687.0 sf

3rd Level
B1
Net: 585 sf
Exempt Stairs: 35.3 sf
Gross: 620.3 sf

Unit B2
NET AREA:1301.2 sf
/GROSS AREA:1963.3 sf

Unit B1
NET AREA:1205.7 sf
/GROSS AREA: 1862.7 sf

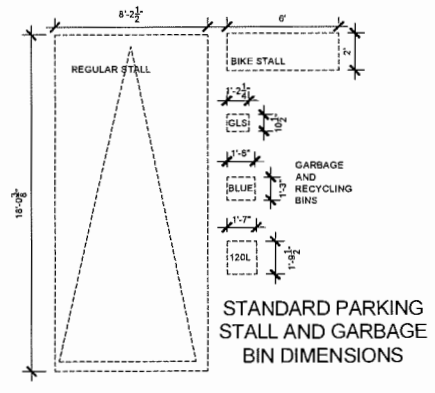

STANDARD PARKING
STALL AND GARBAGE
BIN DIMENSIONS

NOTES:
1. ALL UNITS WILL INCORPORATE FEATURES FOR AGING IN PLACE WHICH INCLUDE HAND RAILS AT ALL STAIRS, LEVER TYPE DOOR HANDLES AND PLUMBING FIXTURE CONTROLS THROUGHOUT AND SOLID BLOCKING AT TUBS/ SHOWERS AND BEHIND AND/OR BESIDE TOILETS IN ALL BATH AND POWDER ROOMS.
2. FLOOR AREA IS MEASURED TO THE OUTSIDE (FACE OF SHEATHING) OF EXTERIOR WALLS AND TO THE CENTRELINE OF PARTY (SUITE DEMISING) WALLS. CALCULATION OF FSR AS NOTED IS CALCULATED PER SECTION 4.4 OF THE ZONING AND DEVELOPMENT BYLAW. PER THIS SECTION, IT EXCLUDES UP TO 50 m2 (538 SF) PER UNIT FOR ON SITE PARKING (HERE NOTED AS GARAGE) AND UP TO 10 m2 (107.6 SF) PER UNIT FOR STAIRCASES ON THE FIRST 2 LEVELS AND THE INTERIOR ENTRY AREA ADJACENT TO THE STAIRS (NOTED HERE AS ENTRY/STAIR EXEMPTION AT LEVEL 1 AND STAIR EXEMPTION AT LEVEL 2).
3. ALL OF THE RESIDENT PARKING STALLS WILL BE EQUIPPED WITH 120V ELECTRIC PLUG-INS AND AN ADDITIONAL 25% OF THE RESIDENT PARKING STALLS WILL BE PRE-DUCTED FOR FUTURE WIRING TO ACCOMMODATE THE FUTURE INSTALLATION OF SPECIALIZED ELECTRIC VEHICLE CHARGING EQUIPMENT.
4. ALL BUILDINGS WILL BE DESIGNED TO MEET THE BC SOLAR HOT WATER READY REGULATION.

This drawings must not be scaled. The General Contractor shall verify all dimensions, datums and levels prior to commencement of work. All errors and omissions to be reported immediately to the Architect. Variations and modifications to work shown shall not be carried out without the written permission from the Architect. Copyright reserved. These drawings and the design are, and at all times remain, the exclusive property of the Architect, and cannot be used and/ or reproduced without the consent of the Architect, in which case the reproduction must bear their name as the Architect.

DRAWING ISSUES

1	DEC 22,2016	ISSUE FOR REZONING
2	APR 4 ,2017	RE-ISSUE FOR REZONING
3	JUL 19, 2017	ISSUE FOR DEVELOPMENT PERMIT
4	MAR 9, 2018	RE-ISSUE FOR DEVELOPMENT PERMIT

CONSULTANTS

CLIENT
REFINED PROPERTIES

engage
ARCHITECTURE

ENGAGE ARCHITECTURE INC
B1 - 343 RAILWAY STREET
VANCOUVER BC V6A 1A4
T: 778-772-4034
www.engagearchitecture.ca

PROJECT# 16.15

SEAL

PROJECT
WESTMINSTER AT MCLEAN TOWNHOUSES
22720 AND 22740 WESTMINSTER HWY.
RICHMOND BC

DRAWING
UNIT PLANS
B1 AND B2

CHECKED BY:	DRAWN BY:
KS	KS
DATE: JULY 2016	SCALE: 1/4" = 1'-0"

DWG No.
A3-02

DP 17-781050-16

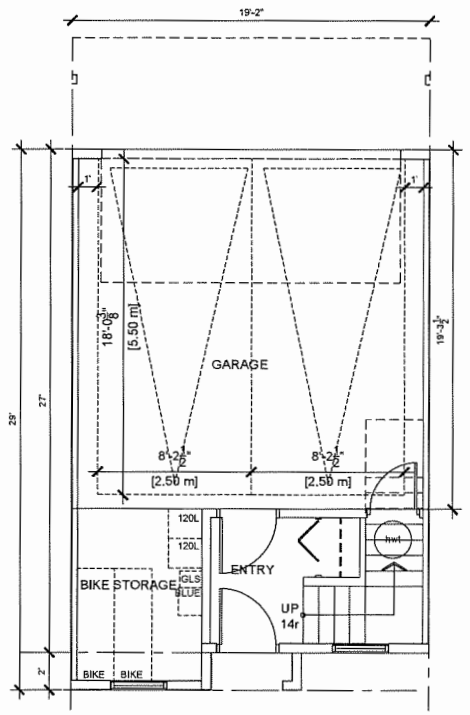

Ground Level
C
Net: 0 sf
Exempt: Garage 438.7 sf
Entry/stairs 93.8 sf
Gross: 532.5 sf

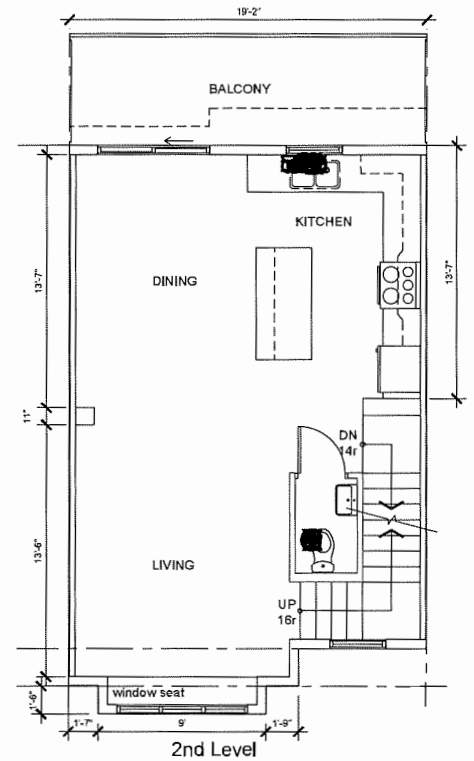

2nd Level
C
Net: 541.9 sf
Exempt Stairs:13.8 sf
Gross: 555.7 sf

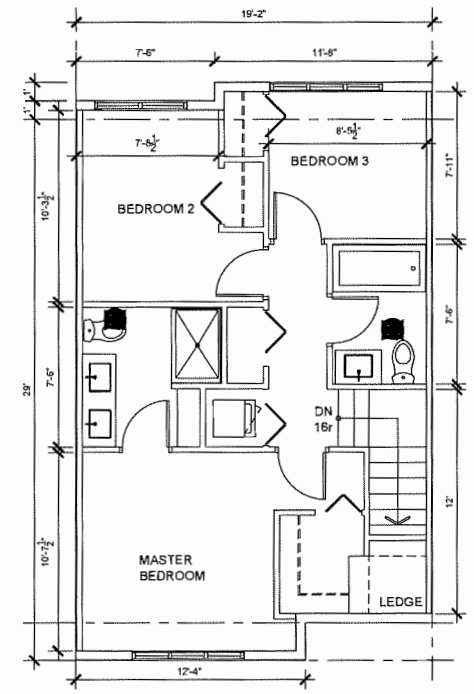

3rd Level
C
Net: 543.8 sf
Exempt Stairs: 29.2 sf
Gross: 573.0 sf

Unit C
NET AREA:1085.7 sf
/GROSS AREA:1661.2 sf

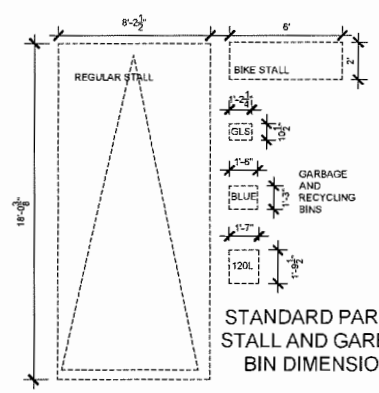

STANDARD PARKING STALL AND GARBAGE BIN DIMENSIONS

NOTES:
1. ALL UNITS WILL INCORPORATE FEATURES FOR AGING IN PLACE WHICH INCLUDE HAND RAILS AT ALL STAIRS, LEVER TYPE DOOR HANDLES AND PLUMBING FIXTURE CONTROLS THROUGHOUT AND SOLID BLOCKING AT TUBS/ SHOWERS AND BEHIND AND/OR BESIDE TOILETS IN ALL BATH AND POWDER ROOMS.
2. FLOOR AREA IS MEASURED TO THE OUTSIDE (FACE OF SHEATHING) OF EXTERIOR WALLS AND TO THE CENTRELINE OF PARTY (SUITE DEMISING) WALLS. CALCULATION OF FSR AS NOTED IS CALCULATED PER SECTION 4.4 OF THE ZONING AND DEVELOPMENT BYLAW. PER THIS SECTION, IT EXCLUDES UP TO 50 m2 (538 SF) PER UNIT FOR ON SITE PARKING (HERE NOTED AS GARAGE) AND UP TO 10 m2 (107.6 SF) PER UNIT FOR STAIRCASES ON THE FIRST 2 LEVELS AND THE INTERIOR ENTRY AREA ADJACENT TO THE STAIRS (NOTED HERE AS ENTRY/STAIR EXEMPTION AT LEVEL 1 AND STAIR EXEMPTION AT LEVEL 2).
3. ALL OF THE RESIDENT PARKING STALLS WILL BE EQUIPPED WITH 120V ELECTRIC PLUG-INS AND AN ADDITIONAL 25% OF THE RESIDENT PARKING STALLS WILL BE PRE-DUCTED FOR FUTURE WIRING TO ACCOMMODATE THE FUTURE INSTALLATION OF SPECIALIZED ELECTRIC VEHICLE CHARGING EQUIPMENT.
4. ALL BUILDINGS WILL BE DESIGNED TO MEET THE BC SOLAR HOT WATER READY REGULATION.

This drawings must not be scaled. The General Contractor shall verify all dimensions, datums and levels prior to commencement of work. All errors and omissions to be reported immediately to the Architect. Variations and modifications to work shown shall not be carried out without the written permission from the Architect. Copyright reserved. These drawings and the design are, and at all times remain, the exclusive property of the Architect, and cannot be used and/or reproduced without the consent of the Architect, in which case the reproduction must bear their name as the Architect.

DRAWING ISSUES

1	DEC.22.2016	ISSUE FOR REZONING
2	APR.4.2017	RE-ISSUE FOR REZONING
3	JUL.10.2017	ISSUE FOR DEVELOPMENT PERMIT
4	MAR.6.2018	RE-ISSUE FOR DEVELOPMENT PERMIT

CONSULTANTS

CLIENT
REFINED PROPERTIES

engage ARCHITECTURE

ENGAGE ARCHITECTURE INC
B1 - 343 RAILWAY STREET
VANCOUVER BC V6A 1A4
T: 778-772-4034
www.engagearchitecture.ca

PROJECT# 16.15

SEAL

PROJECT
WESTMINSTER AT MCLEAN TOWNHOUSES
22720 AND 22740 WESTMINSTER HWY.
RICHMOND BC

DRAWING
UNIT PLANS
C

CHECKED BY: KS	DRAWN BY: KS
DATE: JULY 2016	SCALE: 1/4" = 1'-0"

DWG No.
A3-03

DP 17-781050-17

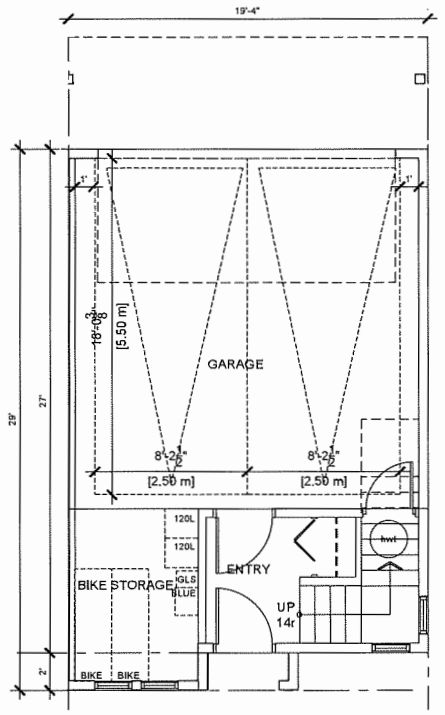

Ground Level
C1
Net: 0 sf
Exempt: Garage 442.0 sf
Entry/stairs 95.0sf
Gross: 537.0 sf

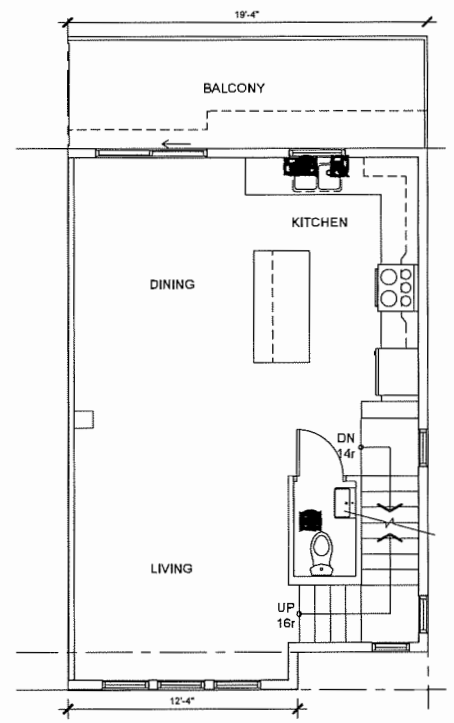

2nd Level
C1
Net: 534.4 sf
Exempt Stairs:12.6 sf
Gross: 547.0 sf

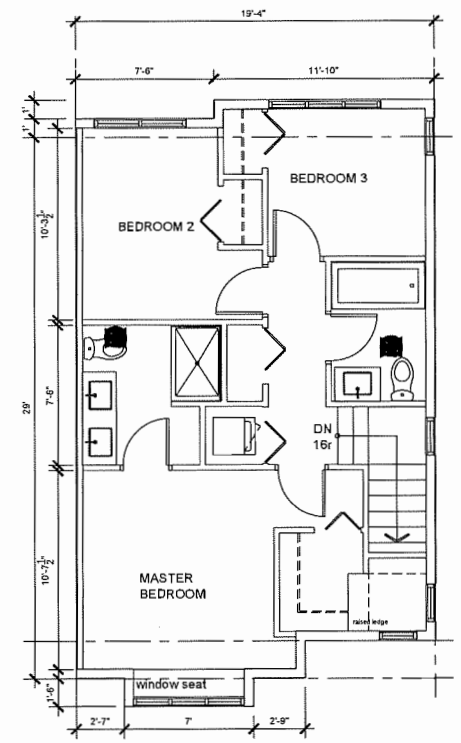

3rd Level
C1
Net: 559.1 sf
Exempt Stairs: 29.2 sf
Gross: 588.3 sf

Unit C1
NET AREA:1193.5 sf
/GROSS AREA:1672.3 sf

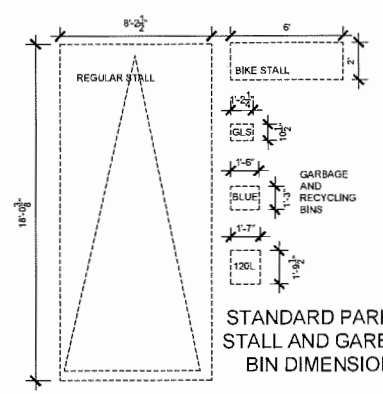

STANDARD PARKING
STALL AND GARBAGE
BIN DIMENSIONS

NOTES:
1. ALL UNITS WILL INCORPORATE FEATURES FOR AGING IN PLACE WHICH INCLUDE HAND RAILS AT ALL STAIRS, LEVER TYPE DOOR HANDLES AND PLUMBING FIXTURE CONTROLS THROUGHOUT AND SOLID BLOCKING AT TUB&/ SHOWERS AND BEHIND AND/OR BESIDE TOILETS IN ALL BATH AND POWDER ROOMS.
2. FLOOR AREA IS MEASURED TO THE OUTSIDE (FACE OF SHEATHING) OF EXTERIOR WALLS AND TO THE CENTRELINE OF PARTY (SUITE DEMISING) WALLS. CALCULATION OF FSR AS NOTED IS CALCULATED PER SECTION 4.4 OF THE ZONING AND DEVELOPMENT BYLAW. PER THIS SECTION, IT EXCLUDES UP TO 50 m2 (538 SF) PER UNIT FOR ON SITE PARKING (HERE NOTED AS GARAGE) AND UP TO 10 m2 (107.6 SF) PER UNIT FOR STAIRCASES ON THE FIRST 2 LEVELS AND THE INTERIOR ENTRY AREA ADJACENT TO THE STAIRS (NOTED HERE AS ENTRY/STAIR EXEMPTION AT LEVEL 1 AND STAIR EXEMPTION AT LEVEL 2).
3. ALL OF THE RESIDENT PARKING STALLS WILL BE EQUIPPED WITH 120V ELECTRIC PLUG-INS AND AN ADDITIONAL 25% OF THE RESIDENT PARKING STALLS WILL BE PRE-DUCTED FOR FUTURE WIRING TO ACCOMMODATE THE FUTURE INSTALLATION OF SPECIALIZED ELECTRIC VEHICLE CHARGING EQUIPMENT.
4. ALL BUILDINGS WILL BE DESIGNED TO MEET THE BC SOLAR HOT WATER READY REGULATION.

This drawings must not be scaled. The General Contractor shall verify all dimensions, datums and levels prior to commencement of work. All errors and omissions to be reported immediately to the Architect. Variations and modifications to work shown shall not be carried out without the written permission from the Architect. Copyright reserved. These drawings and the design are, and at all times remain, the exclusive property of the Architect, and cannot be used and/or reproduced without the consent of the Architect, in which case the reproduction must bear their name as the Architect.

DRAWING ISSUES

1	DEC 22, 2016	ISSUE FOR REZONING
2	APR 4, 2017	RE-ISSUE FOR REZONING
3	JUL 19, 2017	ISSUE FOR DEVELOPMENT PERMIT
4	MAR 9, 2018	RE-ISSUE FOR DEVELOPMENT PERMIT

CONSULTANTS

CLIENT

REFINED PROPERTIES

engage ARCHITECTURE

ENGAGE ARCHITECTURE INC
B1 - 343 RAILWAY STREET
VANCOUVER BC V6A 1A4
T: 778-772-4034
www.engagearchitecture.ca

PROJECT# 16.15

SEAL

PROJECT
WESTMINSTER AT MCLEAN TOWNHOUSES
22720 AND 22740 WESTMINSTER HWY.
RICHMOND BC

DRAWING
UNIT PLANS
C1

CHECKED BY:	DRAWN BY:
KS	KS
DATE: JULY 2016	SCALE: 1/4" = 1'-0"

DWG No.
A3-04

DP 17-781050-18

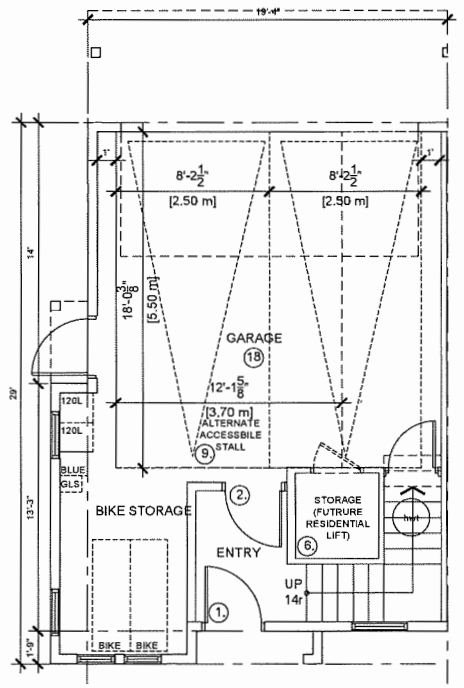

Ground Level
C2
Net: 0 sf
Exempt: Garage 480.4 sf
Entry/stairs 86.6 sf
Gross: 567 sf

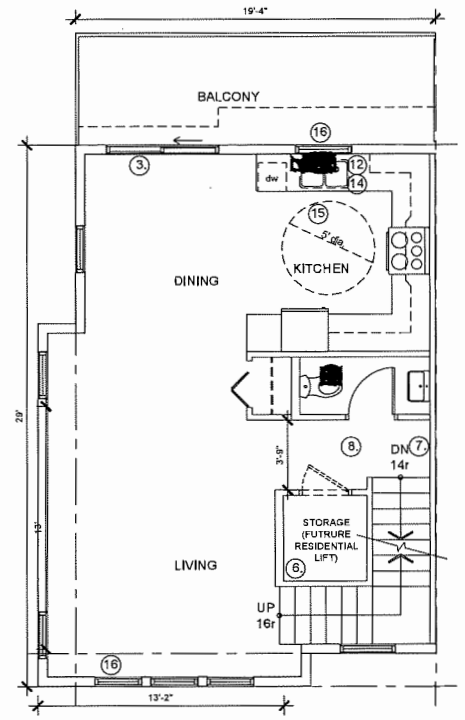

2nd Level
C2
Net: 564.2 sf
Exempt Stairs: 21 sf
Gross: 585.2 sf

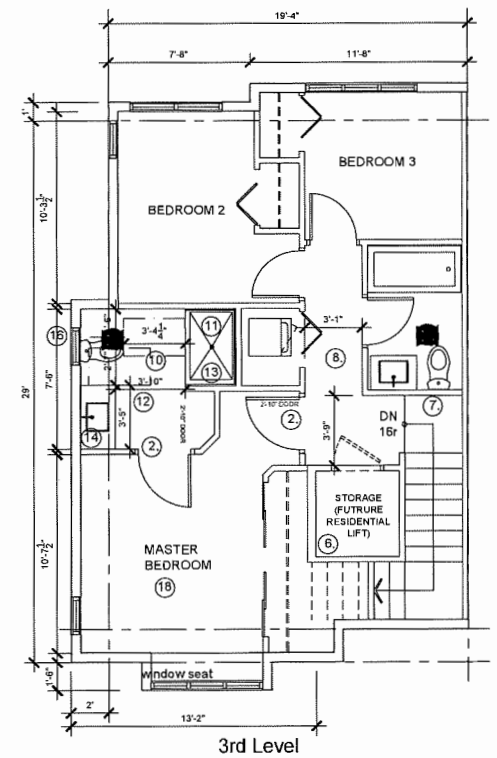

3rd Level
C2
Net: 584.6 sf
Exempt Stairs: 42.1 sf
Gross: 626.7 sf

Unit C2
NET AREA:1148.8 sf
/GROSS AREA:1778.9 sf

ACCESSIBLE
CONVERTIBLE UNIT TYPE

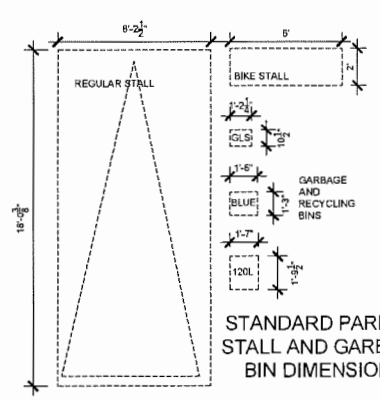

STANDARD PARKING STALL AND GARBAGE BIN DIMENSIONS

NOTES:
1. ALL UNITS WILL INCORPORATE FEATURES FOR AGING IN PLACE WHICH INCLUDE HAND RAILS AT ALL STAIRS, LEVER TYPE DOOR HANDLES AND PLUMBING FIXTURE CONTROLS THROUGHOUT AND SOLID BLOCKING AT TUBS/ SHOWERS AND BEHIND AND/OR BESIDE TOILETS IN ALL BATH AND POWDER ROOMS.
2. FLOOR AREA IS MEASURED TO THE OUTSIDE (FACE OF SHEATHING) OF EXTERIOR WALLS AND TO THE CENTRELINE OF PARTY (SUITE DEMISING) WALLS. CALCULATION OF FSR AS NOTED IS CALCULATED PER SECTION 4.4 OF THE ZONING AND DEVELOPMENT BYLAW. PER THIS SECTION, IT EXCLUDES UP TO 50 m2 (538 SF) PER UNIT FOR ON SITE PARKING (HERE NOTED AS GARAGE) AND UP TO 10 m2 (107.5 SF) PER UNIT FOR STAIRCASES ON THE FIRST 2 LEVELS AND THE INTERIOR ENTRY AREA ADJACENT TO THE STAIRS (NOTED HERE AS ENTRY/STAIR EXEMPTION AT LEVEL 1 AND STAIR EXEMPTION AT LEVEL 2).
3. ALL OF THE RESIDENT PARKING STALLS WILL BE EQUIPPED WITH 120V ELECTRIC PLUG-INS AND AN ADDITIONAL 25% OF THE RESIDENT PARKING STALLS WILL BE PRE-DUCTED FOR FUTURE WIRING TO ACCOMMODATE THE FUTURE INSTALLATION OF SPECIALIZED ELECTRIC VEHICLE CHARGING EQUIPMENT.
4. ALL BUILDINGS WILL BE DESIGNED TO MEET THE BC SOLAR HOT WATER READY REGULATION.

ACCESSIBLE ADAPTABLE UNIT NOTES (NUMBERED ON PLAN LOCATIONS):
1. ENTRY DOOR SHALL BE 3'-0" DOOR. PROVIDE ROUGH IN FOR FUTURE AUTOMATIC DOOR OPENER (CLEAR SPACE CANNOT BE PROVIDED).
2. PROVIDE 2'-10" DOORS (860mm CLEAR OPENING) TO 1 BEDROOM AND 1 BATH, AND BETWEEN GARAGE AND SUITE AS INDICATED.
3. 6'-0" PATIO DOOR PROVIDED (860 mm CLEAR OPENING), ACCESS IF REQUIRED VIA OWNER INSTALLED FLOOR SHIMS.
4. INTERIOR THRESHOLDS MEET BCBC THROUGHOUT.
5. LEVER STYLE DOOR HANDLES THROUGHOUT.
6. FUTURE VERTICAL LIFT SHAFT. FLOOR TO BE INDEPENDENTLY FRAMED TO ALLOW FOR EASE OF REMOVAL. PROVIDE ROUGH IN FOR FUTURE CONTROLLERS.
7. PROVIDE REINFORCEMENT AT TOP OF STAIR, 2 X 12 SOLID LUMBER AT 3'-0" (914 mm) TO CENTRE APF.
8. MINIMUM CLEAR FINISHED HALLWAY WIDTH IS 35.5" (900mm).
9. GARAGE TO PROVIDE OPTION FOR 1 ACCESSIBLE PARKING STALL WITH MIN. 13.12' (4M) CLEAR GARAGE WIDTH.
10. PROVIDE CLEAR SPACE 3'-4.5" (1020 mm) IN FRONT OF AND BESIDE TOILET.
11. PROVIDE WALL BLOCKING AT TOILET AND SHOWER; BLOCKING TO BE 2X12 SOLID LUMBER AND LOCATED TO MEET BCBC REQUIREMENT FOR GRAB BAR MOUNTING HEIGHTS.
12. PROVIDE LEVER TYPE HANDLES FOR ALL PLUMBING FIXTURES.
13. PROVIDE PRESSURE AND TEMPERATURE CONTROL VALVES FOR SHOWER FAUCET.
14. CABINET BELOW BATHROOM VANITY AND KITCHEN SINK TO BE EASILY REMOVED.
15. 5' (1530mm) TURNING RADIUS IN KITCHEN.
16. WINDOW CAN BE OPENED WITH SINGLE HAND IN LOCATIONS INDICATED.
17. PROVIDE ELECTRICAL OUTLETS IN THE FOLLOWING LOCATIONS: BESIDE WINDOW, BASE OF STAIRWAY, BESIDE TOILET, ABOVE EXTERIOR DOORS. ON FRONT FACE OF KITCHEN COUNTER, WITHIN PROXIMITY OF CONTROL CENTRE FOR SMART HOME OPTIONS.
18. PROVIDE 4-PLEX OUTLET IN MASTER BEDROOM, GARAGE.

This drawings must not be scaled. The General Contractor shall verify all dimensions, datums and levels prior to commencement of work. All errors and omissions to be reported immediately to the Architect. Variations and modifications to work shown shall not be carried out without the written permission from the Architect. Copyright reserved. These drawings and the design are, and at all times remain, the exclusive property of the Architect, and cannot be used and/or reproduced without the consent of the Architect, in which case the reproduction must bear their name as the Architect.

DRAWING ISSUES

1	DEC 22,2016	ISSUE FOR REZONING
2	APR 4, 2017	RE-ISSUE FOR REZONING
3	JUL 19, 2017	ISSUE FOR DEVELOPMENT PERMIT
4	MAR 9, 2018	RE-ISSUE FOR DEVELOPMENT PERMIT

CONSULTANTS

CLIENT

REFINED PROPERTIES

engage ARCHITECTURE

ENGAGE ARCHITECTURE INC
B1 - 343 RAILWAY STREET
VANCOUVER BC V6A 1A4
T: 778-772-4034
www.engagearchitecture.ca

PROJECT# 16.15

SEAL

PROJECT
WESTMINSTER AT MCLEAN TOWNHOUSES
22720 AND 22740 WESTMINSTER HWY.
RICHMOND BC

DRAWING
UNIT PLANS
C2

CHECKED BY:	DRAWN BY:
KS	KS
DATE: JULY 2016	SCALE: 1/4" = 1'-0"

DWG No.
A3-05

DP 17-781050-19

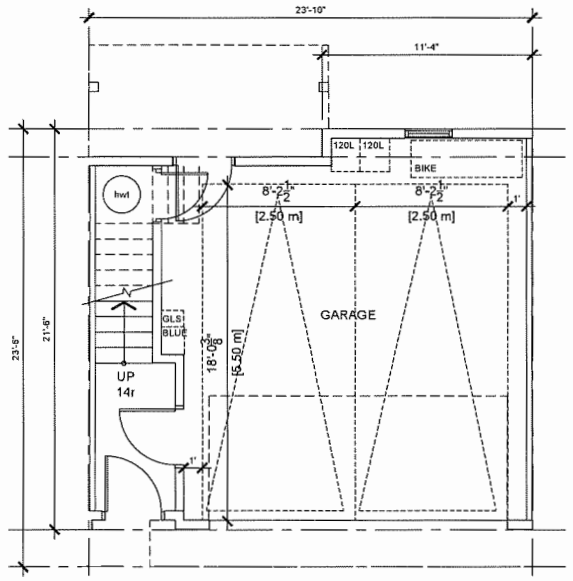

Ground Level
D
Net: 0 sf
Exempt: Garage 405.1 sf
Entry/stairs 86.3 sf
Gross: 491.4 sf

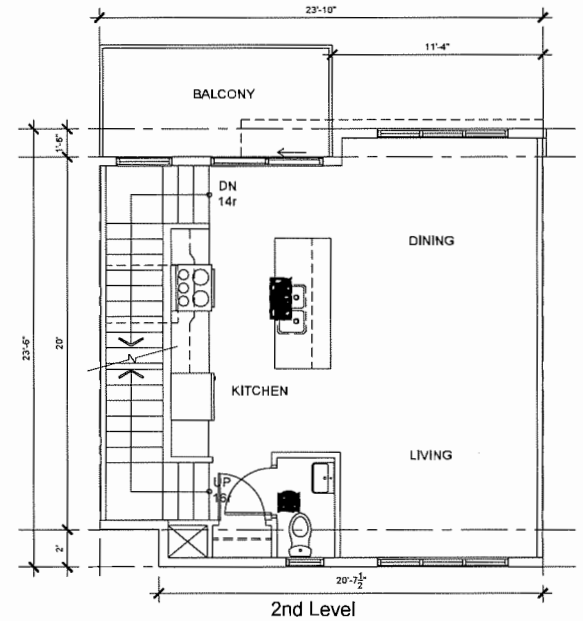

2nd Level
D
Net: 513.6 sf
Exempt Stairs: 21.3 sf
Gross: 534.9 sf

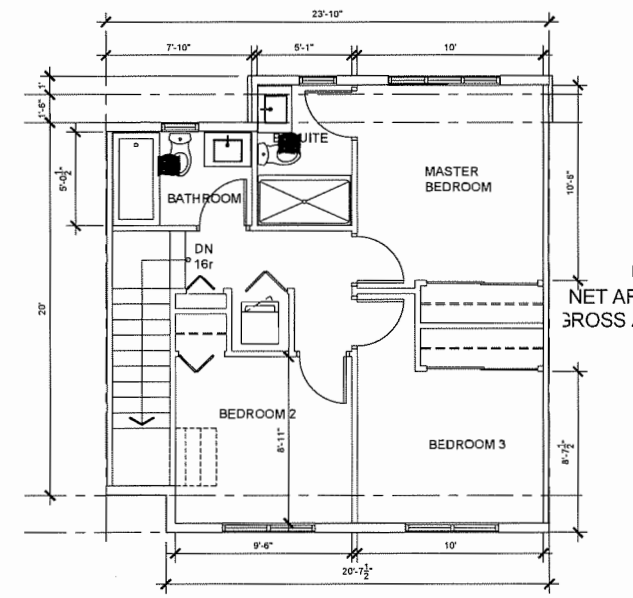

3rd Level
D
Net: 513.7 sf
Exempt Stairs: 44.7 sf
Gross: 558.4 sf

Unit D
NET AREA:1027.3 sf
GROSS AREA:1584.7 sf

NOTES:
1. ALL UNITS WILL INCORPORATE FEATURES FOR AGING IN PLACE WHICH INCLUDE HAND RAILS AT ALL STAIRS, LEVER TYPE DOOR HANDLES AND PLUMBING FIXTURE CONTROLS THROUGHOUT AND SOLID BLOCKING AT TUBS/ SHOWERS AND BEHIND AND/OR BESIDE TOILETS IN ALL BATH AND POWDER ROOMS.
2. FLOOR AREA IS MEASURED TO THE OUTSIDE (FACE OF SHEATHING) OF EXTERIOR WALLS AND TO THE CENTRELINE OF PARTY (SUITE DEMISING) WALLS. CALCULATION OF FSR AS NOTED IS CALCULATED PER SECTION 4.4 OF THE ZONING AND DEVELOPMENT BYLAW. PER THIS SECTION, IT EXCLUDES UP TO 50 m2 (538 SF) PER UNIT FOR ON SITE PARKING (HERE NOTED AS GARAGE) AND UP TO 10 m2 (107.6 SF) PER UNIT FOR STAIRCASES ON THE FIRST 2 LEVELS AND THE INTERIOR ENTRY AREA ADJACENT TO THE STAIRS (NOTED HERE AS ENTRY/STAIR EXEMPTION AT LEVEL 1 AND STAIR EXEMPTION AT LEVEL 2).
3. ALL OF THE RESIDENT PARKING STALLS WILL BE EQUIPPED WITH 120V ELECTRIC PLUG-INS AND AN ADDITIONAL 25% OF THE RESIDENT PARKING STALLS WILL BE PRE-DUCTED FOR FUTURE WIRING TO ACCOMMODATE THE FUTURE INSTALLATION OF SPECIALIZED ELECTRIC VEHICLE CHARGING EQUIPMENT.
4. ALL BUILDINGS WILL BE DESIGNED TO MEET THE BC SOLAR HOT

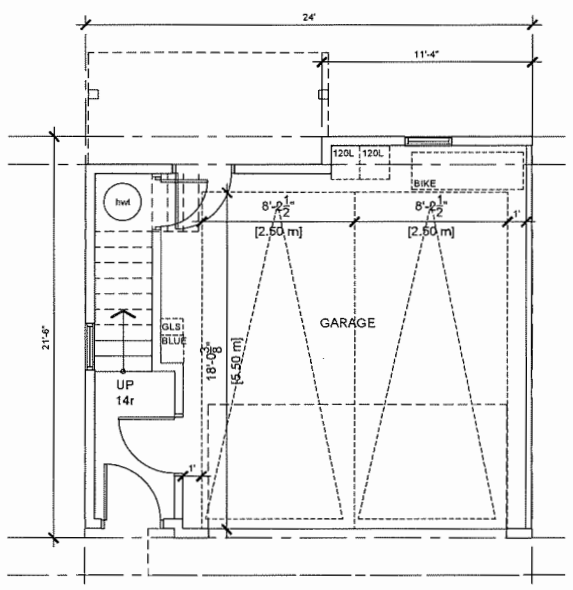

Ground Level
D1
Net: 0 sf
Exempt: Garage 405.1 sf
Entry/stairs 89.5 sf
Gross: 494.6 sf

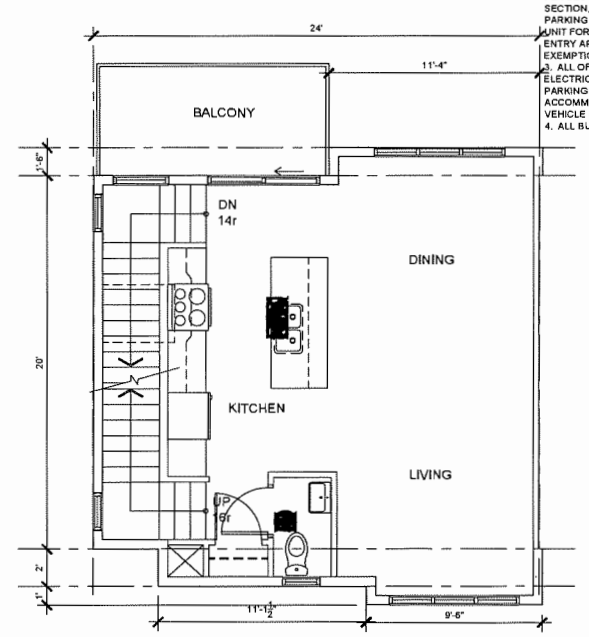

2nd Level
D1
Net: 533.6 sf
Exempt Stairs: 18.1 sf
Gross: 551.7 sf

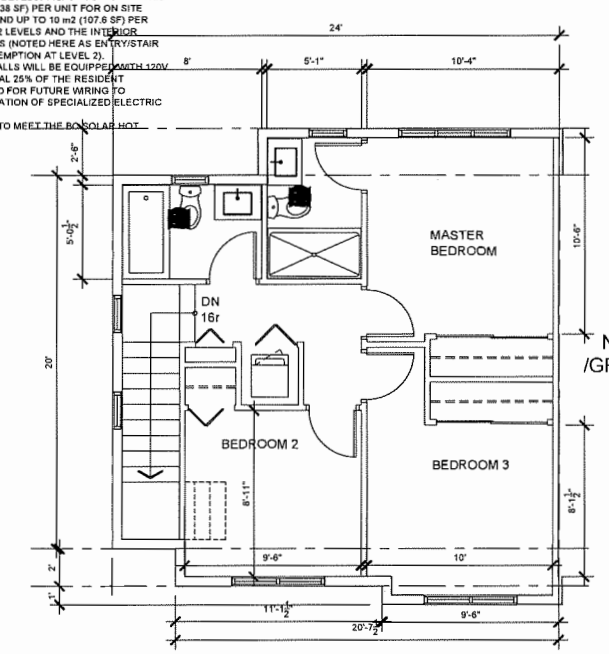

3rd Level
D1
Net: 526.9 sf
Exempt Stairs: 44.7 sf
Gross: 571.6 sf

Unit D1
NET AREA:1060.5 sf
/GROSS AREA:1617.9 s

This drawings must not be scaled. The General Contractor shall verify all dimensions, datums and levels prior to commencement of work. All errors and omissions to be reported immediately to the Architect. Variations and modifications to work shown shall not be carried out without the written permission from the Architect. Copyright reserved. These drawings and the design are, and at all times remain, the exclusive property of the Architect, and cannot be used and/or reproduced without the consent of the Architect, in which case the reproduction must bear their name as the Architect

DRAWING ISSUED

1	DEC 22,2016	ISSUE FOR REZONING
2	APR 4 ,2017	RE-ISSUE FOR REZONING
3	JUL 19, 2017	ISSUE FOR DEVELOPMENT PERMIT
4	MAR 9, 2018	RE-ISSUE FOR DEVELOPMENT PERMIT

CONSULTANTS

CLIENT

REFINED HOMES

engage ARCHITECTURE

ENGAGE ARCHITECTURE INC
B1 - 343 RAILWAY STREET
VANCOUVER BC V6A 1A4
T: 778-772-4034
www.engagearchitecture.ca

PROJECT# 16.15

SEAL

PROJECT
WESTMINSTER AT MCLEAN TOWNHOUSES
22720 AND 22740 WESTMINSTER HWY.
RICHMOND BC

DRAWING
UNIT PLANS
D_D1

CHECKED BY:	DRAWN BY:
KS	KS
DATE: JULY 2016	SCALE: 1/4" = 1'-0"

DWG No.
A3-06

DP 17-781050-20

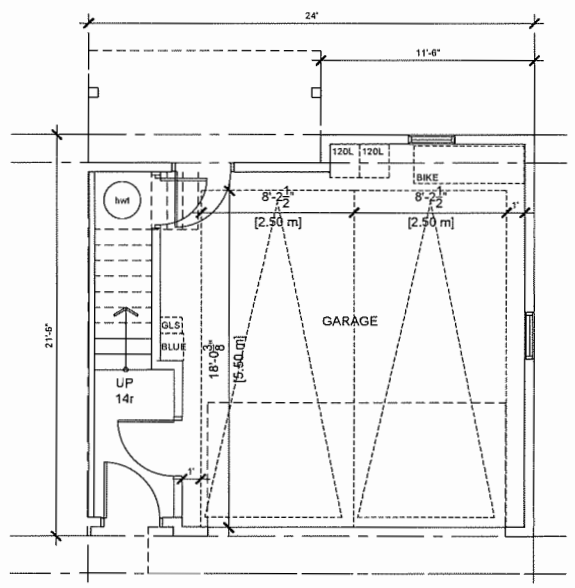

Ground Level
D2
Net: 0 sf
Exempt: Garage 408.6 sf
Entry/stairs 86.3 sf
Gross: 494.9 sf

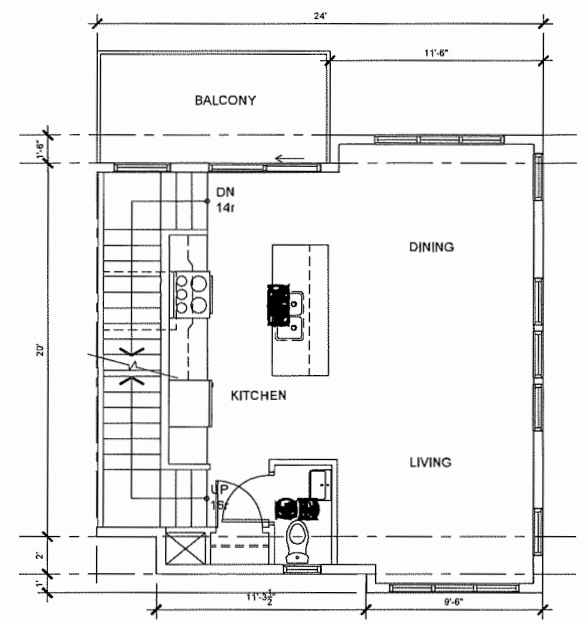

2nd Level
D2
Net: 527 sf
Exempt Stairs: 21.3 sf
Gross: 548.3 sf

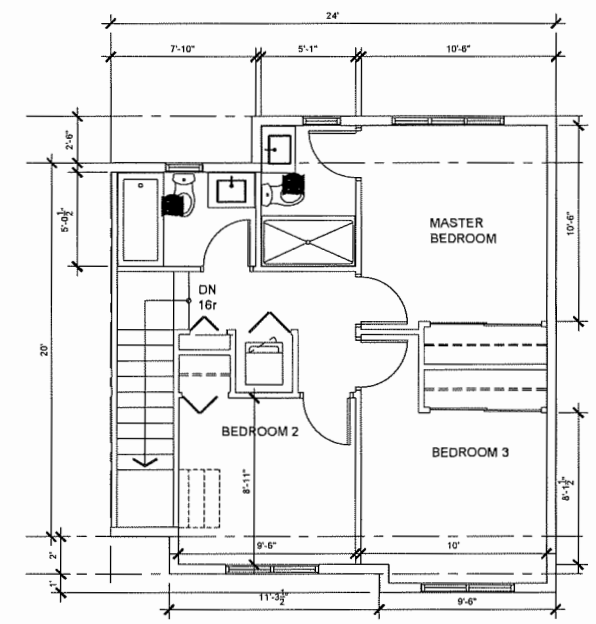

3rd Level
D2
Net: 527.3 sf
Exempt Stairs: 44.7 sf
Gross: 572 sf

Unit D2
NET AREA:1054.3 sf
/GROSS AREA:1615.2 sf

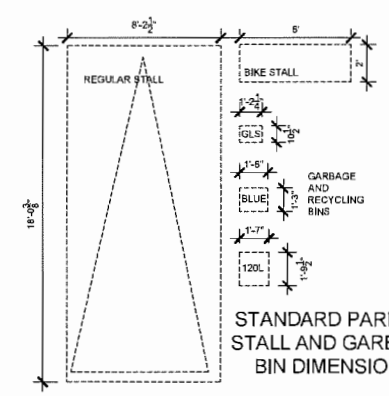

STANDARD PARKING
STALL AND GARBAGE
BIN DIMENSIONS

NOTES:
1. ALL UNITS WILL INCORPORATE FEATURES FOR AGING IN PLACE WHICH INCLUDE HAND RAILS AT ALL STAIRS, LEVER TYPE DOOR HANDLES AND PLUMBING FIXTURE CONTROLS THROUGHOUT AND SOLID BLOCKING AT TUBS/ SHOWERS AND BEHIND AND/OR BESIDE TOILETS IN ALL BATH AND POWDER ROOMS.
2. FLOOR AREA IS MEASURED TO THE OUTSIDE (FACE OF SHEATHING) OF EXTERIOR WALLS AND TO THE CENTRELINE OF PARTY (SUITE DEMISING) WALLS. CALCULATION OF FSR AS NOTED IS CALCULATED PER SECTION 4.4 OF THE ZONING AND DEVELOPMENT BYLAW. PER THIS SECTION, IT EXCLUDES UP TO 50 m2 (538 SF) PER UNIT FOR ON SITE PARKING (HERE NOTED AS GARAGE) AND UP TO 10 m2 (107.6 SF) PER UNIT FOR STAIRCASES ON THE FIRST 2 LEVELS AND THE INTERIOR ENTRY AREA ADJACENT TO THE STAIRS (NOTED HERE AS ENTRY/STAIR EXEMPTION AT LEVEL 1 AND STAIR EXEMPTION AT LEVEL 2).
3. ALL OF THE RESIDENT PARKING STALLS WILL BE EQUIPPED WITH 120V ELECTRIC PLUG-INS AND AN ADDITIONAL 25% OF THE RESIDENT PARKING STALLS WILL BE PRE-DUCTED FOR FUTURE WIRING TO ACCOMMODATE THE FUTURE INSTALLATION OF SPECIALIZED ELECTRIC VEHICLE CHARGING EQUIPMENT.
4. ALL BUILDINGS WILL BE DESIGNED TO MEET THE BC SOLAR HOT WATER READY REGULATION.

This drawings must not be scaled. The General Contractor shall verify all dimensions, datums and levels prior to commencement of work. All errors and omissions to be reported immediately to the Architect. Variations and modifications to work shown shall not be carried out without the written permission from the Architect. Copyright reserved. These drawings and the design are, and at all times remain, the exclusive property of the Architect, and cannot be used and/or reproduced without the consent of the Architect, in which case the reproduction must bear their name as the Architect.

DRAWING ISSUES

1	DEC 22,2016	ISSUE FOR REZONING
2	APR 4 ,2017	RE-ISSUE FOR REZONING
3	JUL 18, 2017	ISSUE FOR DEVELOPMENT PERMIT
4	MAR 8, 2018	RE-ISSUE FOR DEVELOPMENT PERMIT

CONSULTANTS

CLIENT

REFINED PROPERTIES

engage ARCHITECTURE

ENGAGE ARCHITECTURE INC
B1 - 343 RAILWAY STREET
VANCOUVER BC V6A 1A4
T: 778-772-4034
www.engagearchitecture.ca

PROJECT# 16.15

SEAL

PROJECT
WESTMINSTER AT MCLEAN TOWNHOUSES
22720 AND 22740 WESTMINSTER HWY.
RICHMOND BC

DRAWING
UNIT PLANS
D2

CHECKED BY:	DRAWN BY:
KS	KS
DATE: JULY 2016	SCALE: 1/4" = 1'-0"

DWG No.
A3-07

DP 17-781020 -21

1 FRONT ELEVATION (SOUTH)
1/8" = 1'-0"

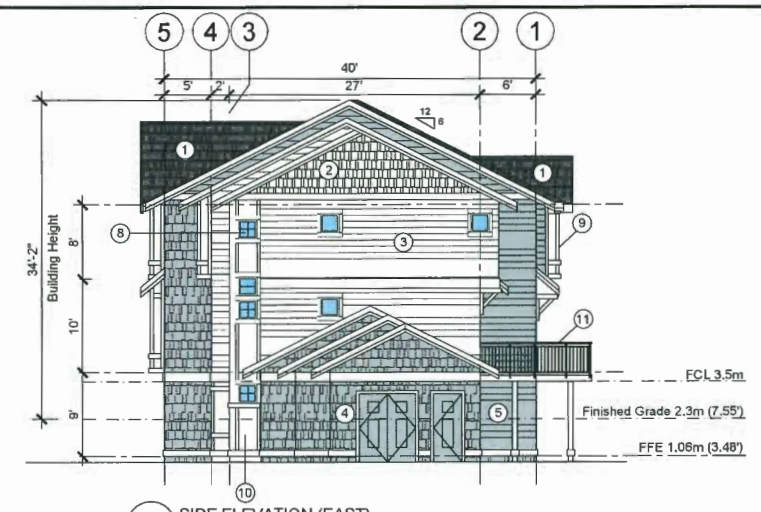

2 SIDE ELEVATION (EAST)
1/8" = 1'-0"

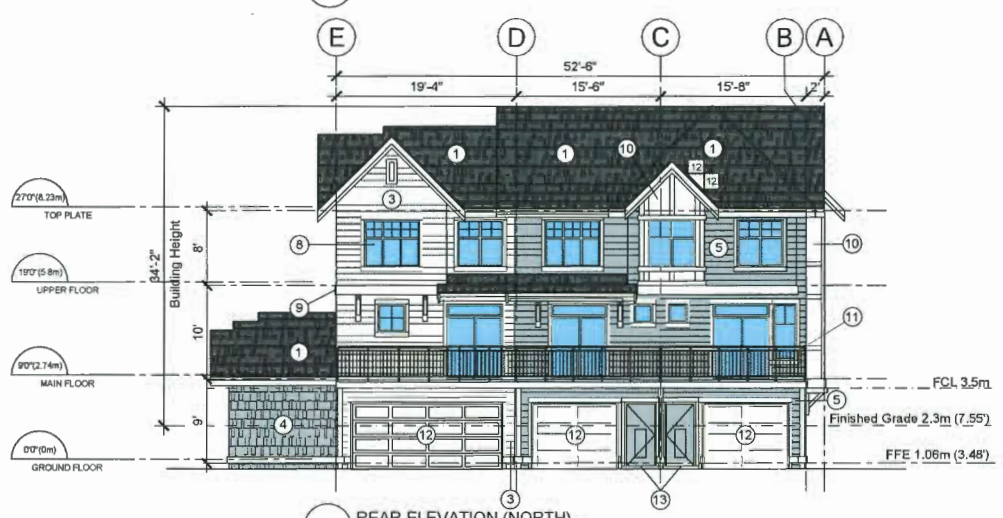

3 REAR ELEVATION (NORTH)
1/8" = 1'-0"

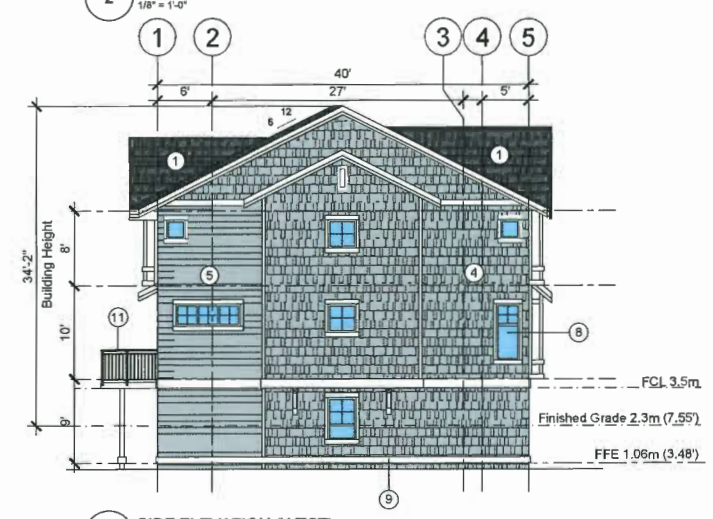

4 SIDE ELEVATION (WEST)
1/8" = 1'-0"

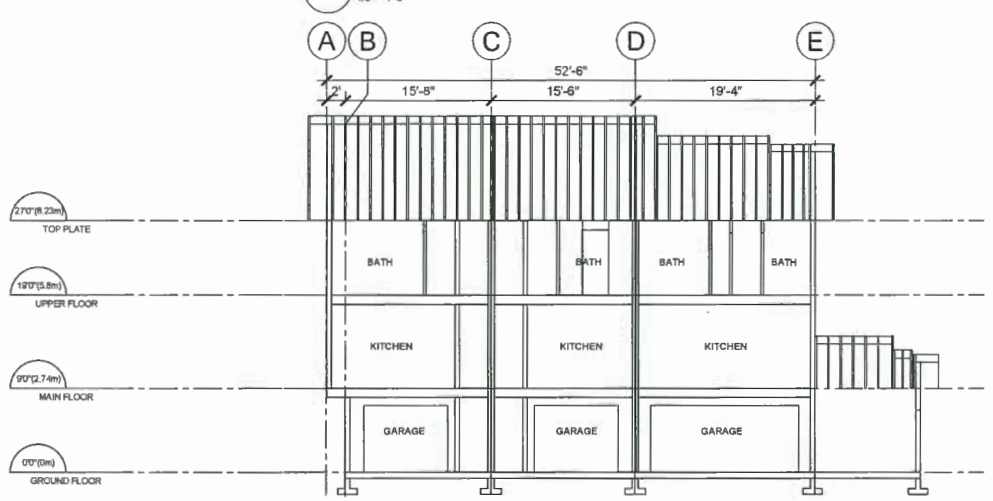

5 SECTION
1/8" = 1'-0"

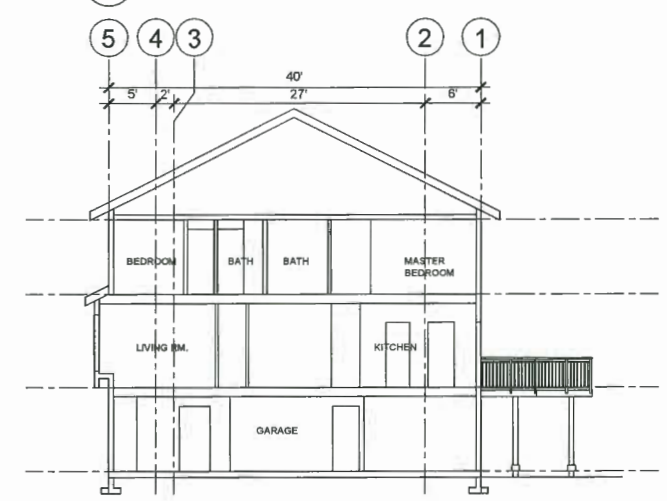

6 SECTION
1/8" = 1'-0"

1. ASPHALT SHINGLE ROOF
2. WHITE SHINGLES
3. WHITE HORIZONTAL SIDING
4. MEDIUM GREY SHINGLES
5. MEDIUM GREY HORIZONTAL SIDING
6. CHARCOAL GREY SHINGLES
7. CHARCOAL GREY HORIZONTAL SIDING
8. VINYL WINDOWS (WHITE)
9. PAINTED WOOD TRIM (WHITE)
10. PAINTED HARDI PANEL (WHITE)
11. ALUMINUM GUARD RAIL
12. GARAGE DOOR (WHITE)
13. PAINTED DOOR
    A) RED
    B) BLUE
    C) GREY

This drawings must not be scaled. The General Contractor shall verify all dimensions, datums and levels prior to commencement of work. All errors and omissions to be reported immediately to the Architect. Variations and modifications to work shown shall not be carried out without the written permission from the Architect. Copyright reserved. These drawings and the design are, and at all times remain, the exclusive property of the Architect, and cannot be used and/or reproduced without the consent of the Architect, in which case the reproduction must bear their name as the Architect.

DRAWING ISSUES

1	DEC 22,2016	ISSUE FOR REZONING
2	APR 4 ,2017	RE-ISSUE FOR REZONING
3	JUL 18, 2017	ISSUE FOR DEVELOPMENT PERMIT
4	MAR 9, 2018	RE-ISSUE FOR DEVELOPMENT PERMIT

CONSULTANTS

CLIENT

REFINED PROPERTIES

engage ARCHITECTURE

ENGAGE ARCHITECTURE INC
B1 - 343 RAILWAY STREET
VANCOUVER BC V6A 1A4
T: 778-772-4034
www.engagearchitecture.ca

PROJECT# 16.15

SEAL

PROJECT

WESTMINSTER AT MCLEAN TOWNHOUSES

22720 AND 22740 WESTMINSTER HWY. RICHMOND BC

DRAWING

BUILDING 1
ELEVATIONS AND SECTIONS

CHECKED BY:	DRAWN BY:
KS	KS
DATE: JULY 2016	SCALE: 1/8" = 1'-0"

DWG No.

A4-00

DP 17-781050-22

1 FRONT ELEVATION (WEST)
1/8" = 1'-0"

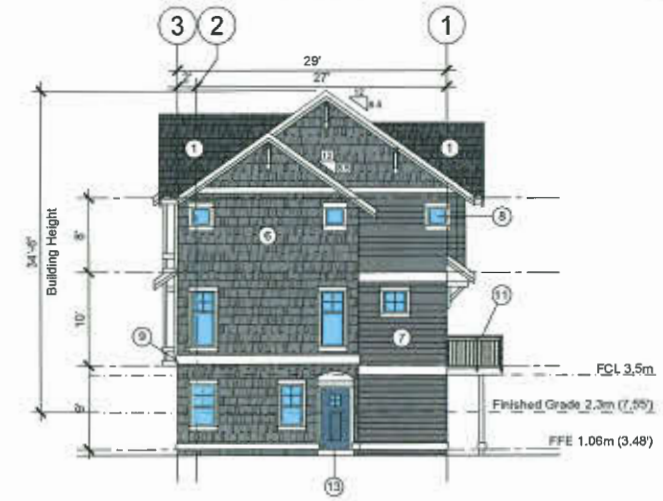

2 SIDE ELEVATION (SOUTH)
1/8" = 1'-0"

3 REAR ELEVATION (EAST)
1/8" = 1'-0"

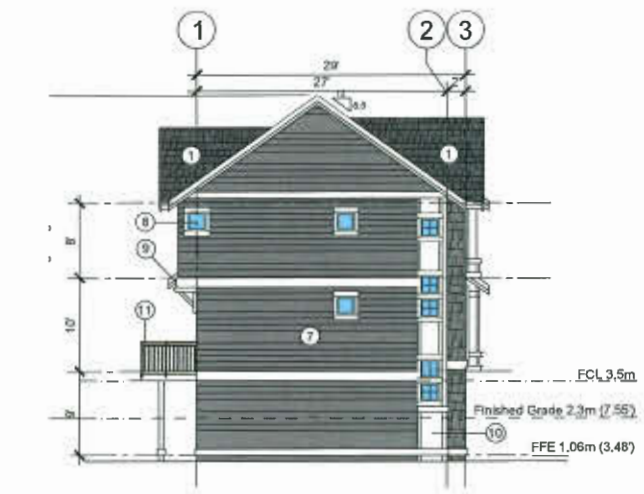

4 SIDE ELEVATION (NORTH)
1/8" = 1'-0"

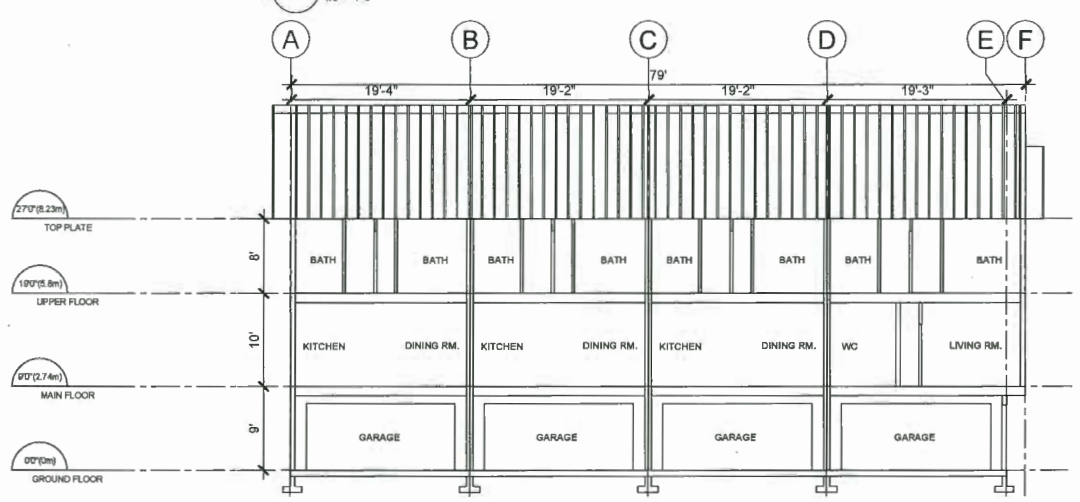

5 SECTION
1/8" = 1'-0"

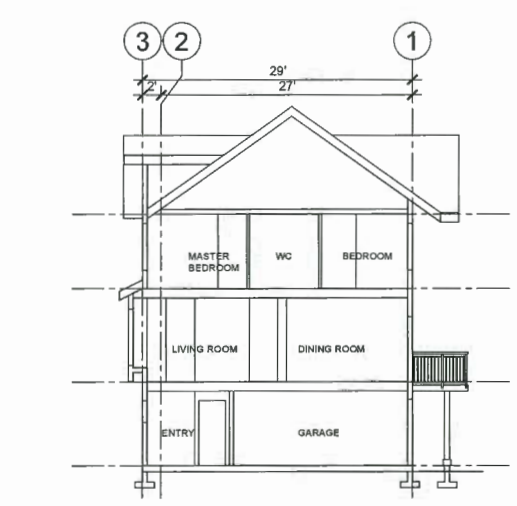

6 SECTION
1/8" = 1'-0"

1. ASPHALT SHINGLE ROOF
2. WHITE SHINGLES
3. WHITE HORIZONTAL SIDING
4. MEDIUM GREY SHINGLES
5. MEDIUM GREY HORIZONTAL SIDING
6. CHARCOAL GREY SHINGLES
7. CHARCOAL GREY HORIZONTAL SIDING
8. VINYL WINDOWS (WHITE)
9. PAINTED WOOD TRIM (WHITE)
10. PAINTED HARDI PANEL (WHITE)
11. ALUMINUM GUARD RAIL
12. GARAGE DOOR (WHITE)
13. PAINTED DOOR
    A) RED
    B) BLUE
    C) GREY

This drawings must not be scaled. The General Contractor shall verify all dimensions, datums and levels prior to commencement of work. All errors and omissions to be reported immediately to the Architect. Variations and modifications to work shown shall not be carried out without the written permission from the Architect. Copyright reserved. These drawings and the design are, and at all times remain, the exclusive property of the Architect, and cannot be used and/or reproduced without the consent of the Architect, in which case the reproduction must bear their name as the Architect.

DRAWING ISSUES

1	DEC 22,2016	ISSUE FOR REZONING
2	APR 4 ,2017	RE-ISSUE FOR REZONING
3	JUL 19, 2017	ISSUE FOR DEVELOPMENT PERMIT
4	MAR 9, 2018	RE-ISSUE FOR DEVELOPMENT PERMIT

CONSULTANTS

CLIENT

REFINED PROPERTIES

engage ARCHITECTURE

ENGAGE ARCHITECTURE INC
B1 - 343 RAILWAY STREET
VANCOUVER BC V6A 1A4
T: 778-772-4034
www.engagearchitecture.ca

PROJECT# 16.15

SEAL

PROJECT
WESTMINSTER AT MCLEAN TOWNHOUSES
22720 AND 22740 WESTMINSTER HWY.
RICHMOND BC

DRAWING
BUILDING 2
ELEVATIONS AND SECTIONS

CHECKED BY:	DRAWN BY:
KS	KS
DATE: JULY 2016	SCALE: 1/8" = 1'-0"

DWG No
A4-01

DP 17-781050-23

1 FRONT ELEVATION (WEST)
1/8" = 1'-0"

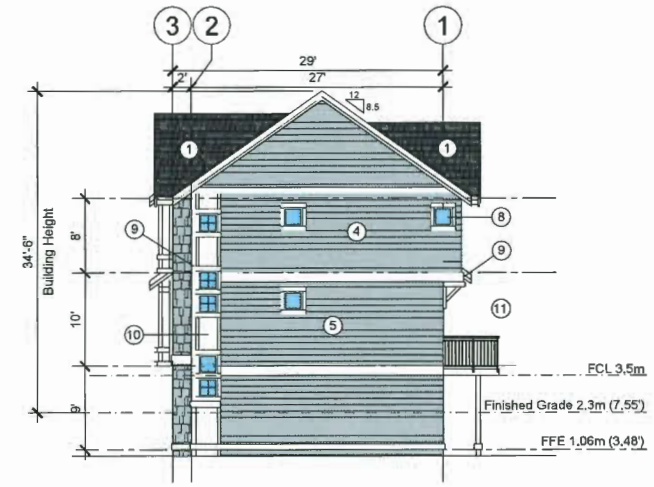

2 SIDE ELEVATION (SOUTH)
1/8" = 1'-0"

3 REAR ELEVATION (EAST)
1/8" = 1'-0"

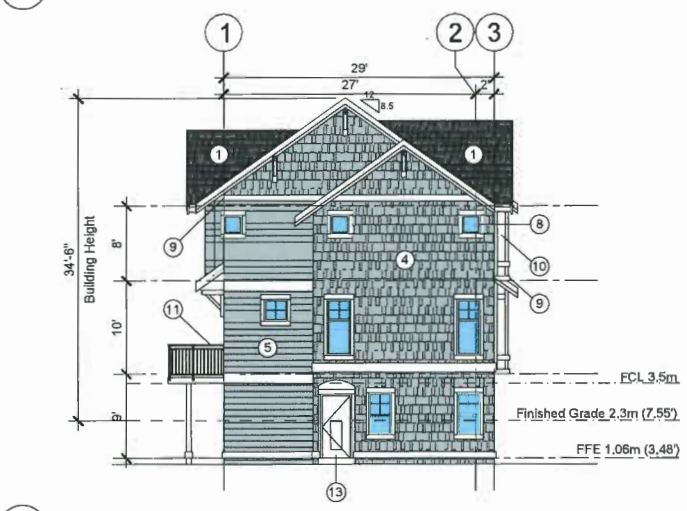

4 SIDE ELEVATION (NORTH)
1/8" = 1'-0"

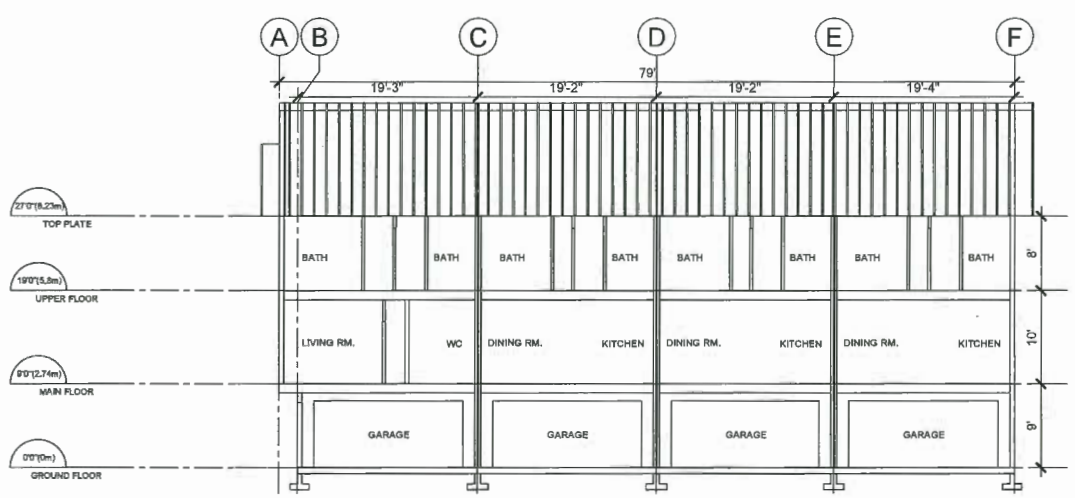

5 SECTION
1/8" = 1'-0"

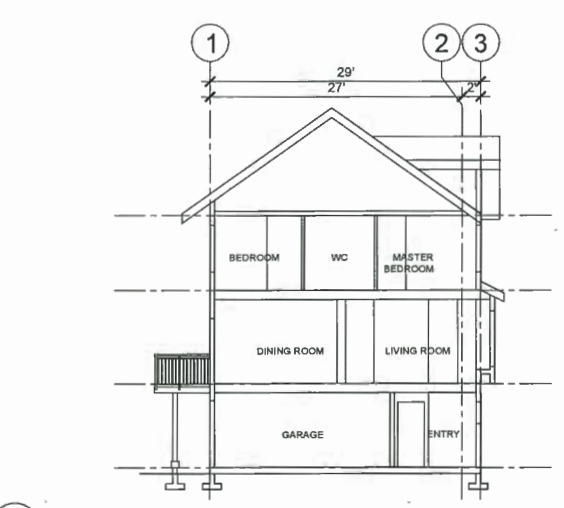

6 SECTION
1/8" = 1'-0"

1. ASPHALT SHINGLE ROOF
2. WHITE SHINGLES
3. WHITE HORIZONTAL SIDING
4. MEDIUM GREY SHINGLES
5. MEDIUM GREY HORIZONTAL SIDING
6. CHARCOAL GREY SHINGLES
7. CHARCOAL GREY HORIZONTAL SIDING
8. VINYL WINDOWS (WHITE)
9. PAINTED WOOD TRIM (WHITE)
10. PAINTED HARDI PANEL (WHITE)
11. ALUMINUM GUARD RAIL
12. GARAGE DOOR (WHITE)
13. PAINTED DOOR
    A) RED
    B) BLUE
    C) GREY

This drawings must not be scaled. The General Contractor shall verify all dimensions, datums and levels prior to commencement of work. All errors and omissions to be reported immediately to the Architect. Variations and modifications to work shown shall not be carried out without the written permission from the Architect. Copyright reserved. These drawings and the design are, and at all times remain, the exclusive property of the Architect, and cannot be used and/or reproduced without the consent of the Architect, in which case the reproduction must bear their name as the Architect.

DRAWING ISSUES

1	DEC 22,2016	ISSUE FOR REZONING
2	APR 4 ,2017	RE-ISSUE FOR REZONING
3	JUL 19, 2017	ISSUE FOR DEVELOPMENT PERMIT
4	MAR 8, 2018	RE-ISSUE FOR DEVELOPMENT PERMIT

CONSULTANTS

OWNER

REFINED PROPERTIES

engage ARCHITECTURE

ENGAGE ARCHITECTURE INC
B1 - 343 RAILWAY STREET
VANCOUVER BC V6A 1A4
T: 778-772-4034
www.engagearchitecture.ca

PROJECT# 16.15

SEAL

PROJECT
WESTMINSTER AT MCLEAN TOWNHOUSES
22720 AND 22740 WESTMINSTER HWY, RICHMOND BC

DRAWING
BUILDING 3
ELEVATIONS AND SECTIONS

CHECKED BY: KS	DRAWN BY: KS
DATE: JULY 2016	SCALE: 1/8" = 1'-0"

DWG No.
A4-02

DP 17-701509-24

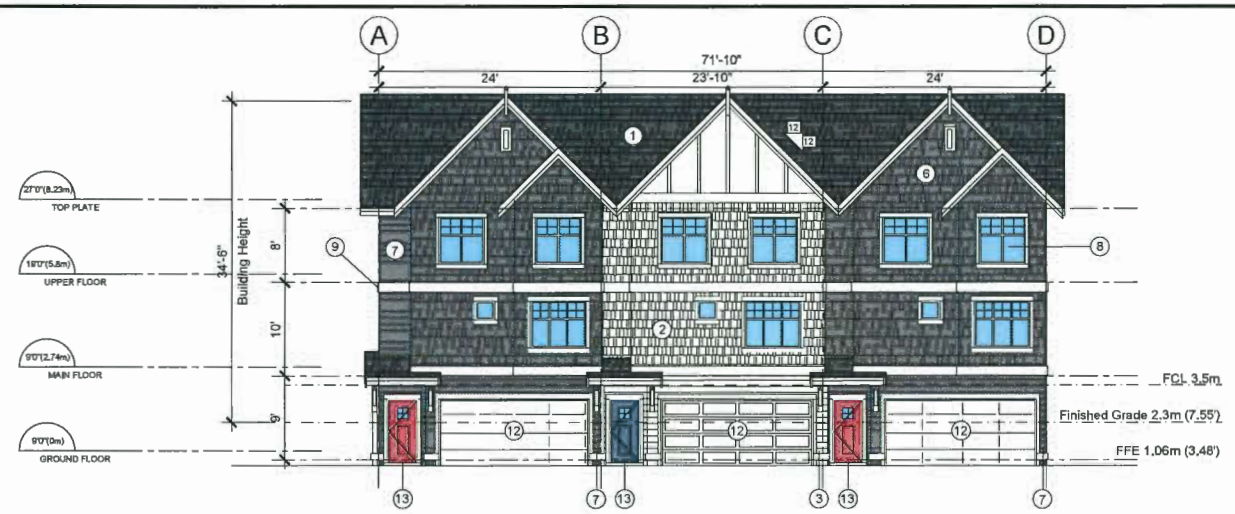

1 FRONT ELEVATION (WEST)
1/8" = 1'-0"

2 SIDE ELEVATION (SOUTH)
1/8" = 1'-0"

3 REAR ELEVATION (EAST)
1/8" = 1'-0"

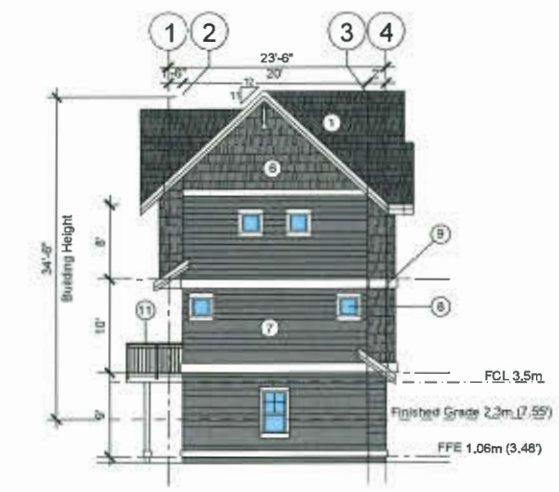

4 SIDE ELEVATION (NORTH)
1/8" = 1'-0"

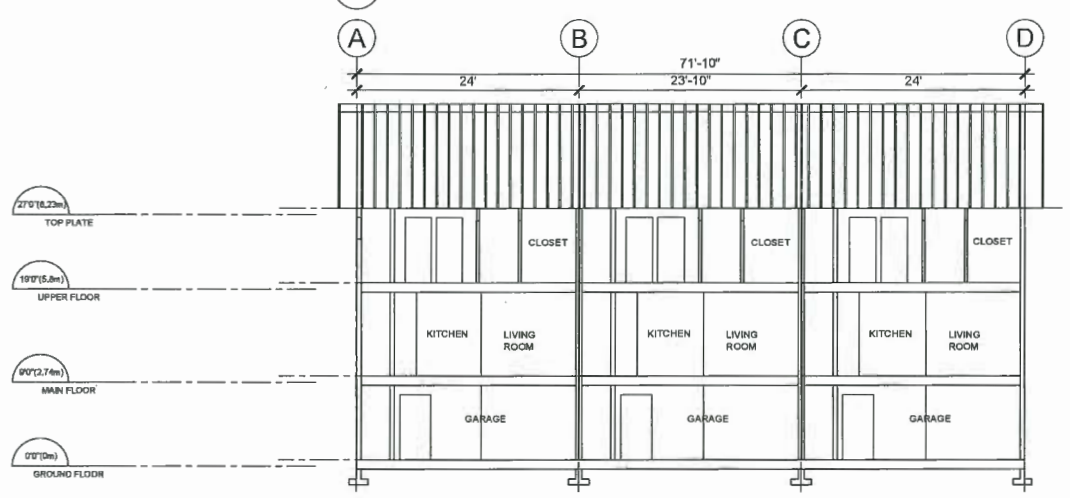

5 SECTION
1/8" = 1'-0"

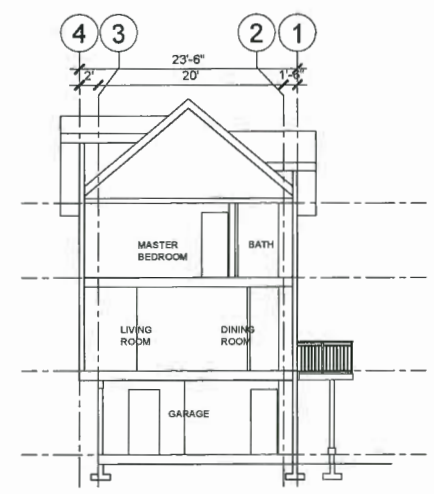

6 SECTION
1/8" = 1'-0"

1. ASPHALT SHINGLE ROOF
2. WHITE SHINGLES
3. WHITE HORIZONTAL SIDING
4. MEDIUM GREY SHINGLES
5. MEDIUM GREY HORIZONTAL SIDING
6. CHARCOAL GREY SHINGLES
7. CHARCOAL GREY HORIZONTAL SIDING
8. VINYL WINDOWS (WHITE)
9. PAINTED WOOD TRIM (WHITE)
10. PAINTED HARDI PANEL (WHITE)
11. ALUMINUM GUARD RAIL
12. GARAGE DOOR (WHITE)
13. PAINTED DOOR
    A) RED
    B) BLUE
    C) GREY

This drawings must not be scaled. The General Contractor shall verify all dimensions, datums and levels prior to commencement of work. All errors and omissions to be reported immediately to the Architect. Variations and modifications to work shown shall not be carried out without the written permission from the Architect. Copyright reserved. These drawings and the design are, and at all times remain, the exclusive property of the Architect, and cannot be used and/or reproduced without the consent of the Architect, in which case the reproduction must bear their name as the Architect.

DRAWING ISSUES

1	DEC.22.2016	ISSUE FOR REZONING
2	APR.4.2017	RE-ISSUE FOR REZONING
3	JUL.19.2017	ISSUE FOR DEVELOPMENT PERMIT
4	MAR.9.2018	RE-ISSUE FOR DEVELOPMENT PERMIT

CONSULTANTS

CLIENT

REFINED PROPERTIES

engage ARCHITECTURE

ENGAGE ARCHITECTURE INC
B1 - 343 RAILWAY STREET
VANCOUVER BC V6A 1A4
T: 778-772-4034
www.engagearchitecture.ca

PROJECT# 16.15

SEAL

PROJECT
WESTMINSTER AT MCLEAN TOWNHOUSES
22720 AND 22740 WESTMINSTER HWY, RICHMOND BC

DRAWING
BUILDING 4
ELEVATIONS AND SECTIONS

CHECKED BY: KS	DRAWN BY: KS
DATE: JULY 2016	SCALE: 1/8" = 1'-0"

DWG No
A4-03

DP 17-781020-25

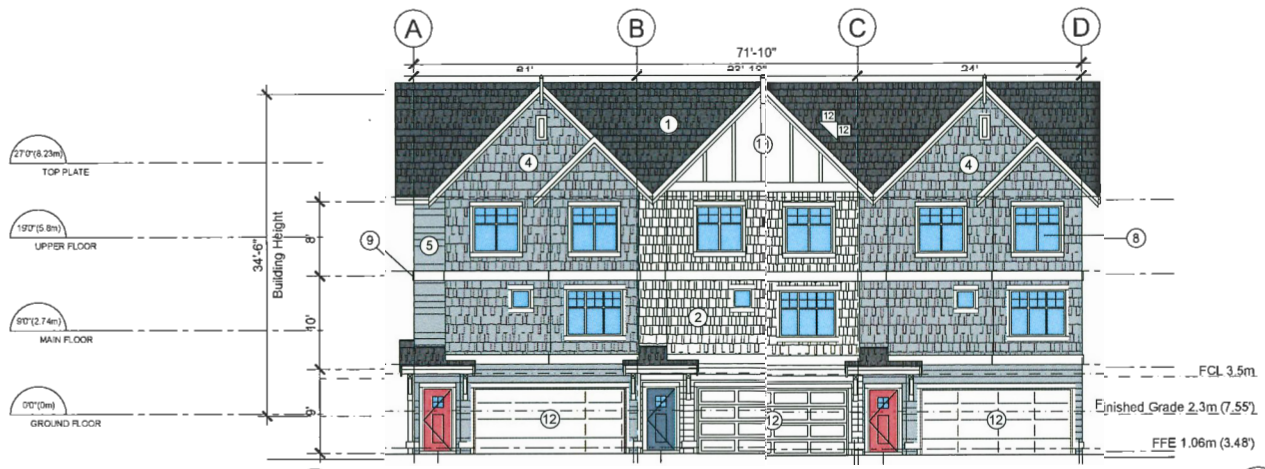

1 FRONT ELEVATION (EAST)
1/8" = 1'-0"

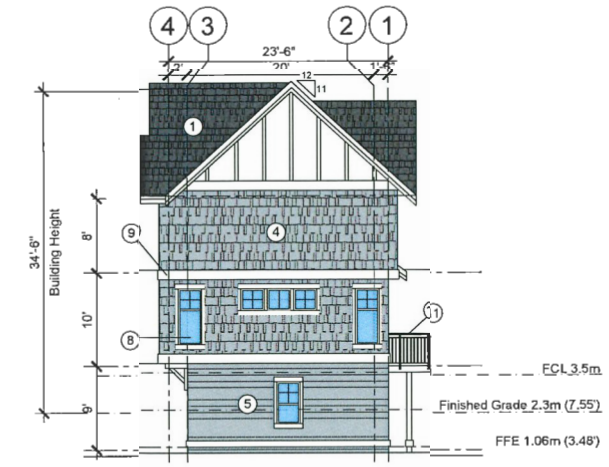

2 SIDE ELEVATION (SOUTH)
1/8" = 1'-0"

3 REAR ELEVATION (WEST)
1/8" = 1'-0"

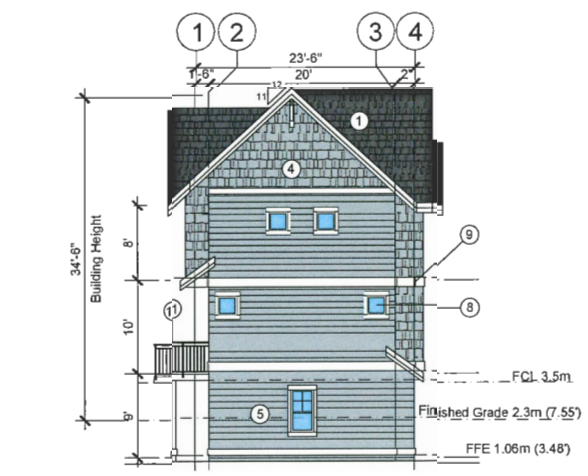

4 SIDE ELEVATION (SOUTH)
1/8" = 1'-0"

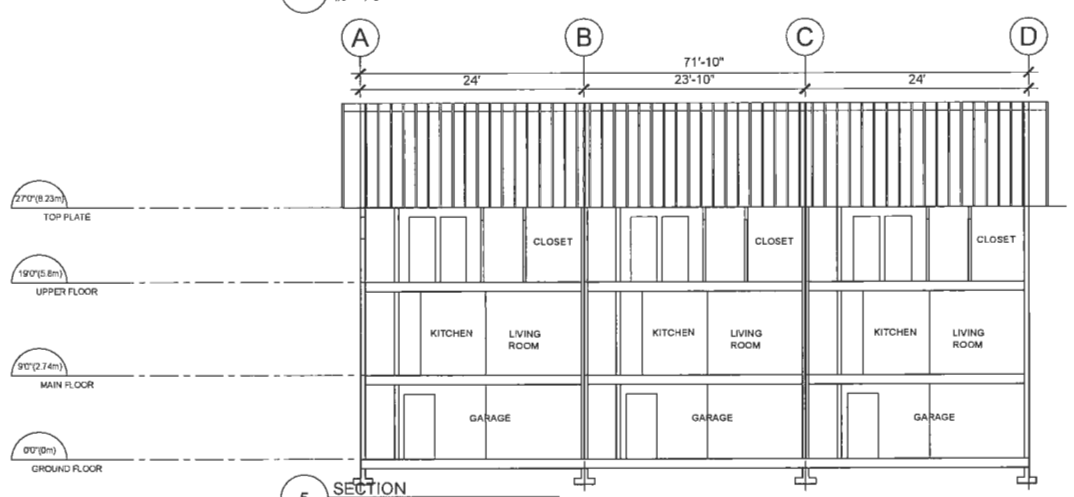

5 SECTION
1/8" = 1'-0"

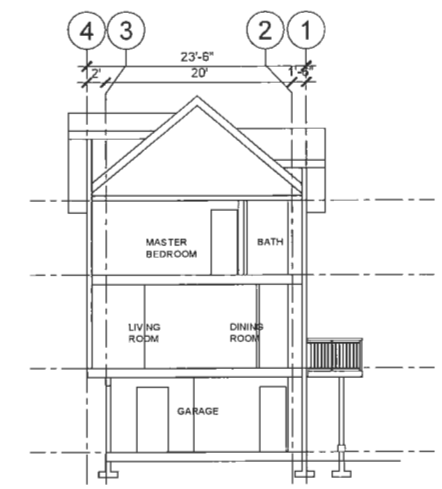

6 SECTION
1/8" = 1'-0"

1. ASPHALT SHINGLE ROOF
2. WHITE SHINGLES
3. WHITE HORIZONTAL SIDING
4. MEDIUM GREY SHINGLES
5. MEDIUM GREY HORIZONTAL SIDING
6. CHARCOAL GREY SHINGLES
7. CHARCOAL GREY HORIZONTAL SIDING
8. VINYL WINDOWS (WHITE)
9. PAINTED WOOD TRIM (WHITE)
10. PAINTED HARDI PANEL (WHITE)
11. ALUMINUM GUARD RAIL
12. GARAGE DOOR (WHITE)
13. PAINTED DOOR
    A) RED
    B) BLUE
    C) GREY

This drawings must not be scaled. The General Contractor shall verify all dimensions, datums and levels prior to commencement of work. All errors and omissions to be reported immediately to the Architect. Variations and modifications to work shown shall not be carried out without the written permission from the Architect. Copyright reserved. These drawings and the design are, and at all times remain, the exclusive property of the Architect, and cannot be used and/or reproduced without the consent of the Architect, in which case the reproduction must bear their name as the Architect.

DRAWING ISSUES

1	DEC 22 2016	ISSUE FOR REZONING
2	APR 4 2017	RE-ISSUE FOR REZONING
3	JUL 19 2017	ISSUE FOR DEVELOPMENT PERMIT
4	MAR 9 2018	RE-ISSUE FOR DEVELOPMENT PERMIT

CONSULTANTS

CLIENT

REFINED PROPERTIES

engage ARCHITECTURE

ENGAGE ARCHITECTURE INC
B1 - 343 RAILWAY STREET
VANCOUVER BC V6A 1A4
T: 778-772-4034
www.engagearchitecture.ca

PROJECT# 16.15

SEAL

PROJECT
WESTMINSTER AT MCLEAN TOWNHOUSES
22720 AND 22740 WESTMINSTER HWY.
RICHMOND BC

DRAWING
BUILDING 5
ELEVATIONS AND SECTIONS

CHECKED BY: KS	DRAWN BY: KS
DATE: JULY 2016	SCALE: 1/8" = 1'-0"

DWG No.
A4-04

DP 17-781050-26

1 FRONT ELEVATION (WEST)
1/8" = 1'-0"

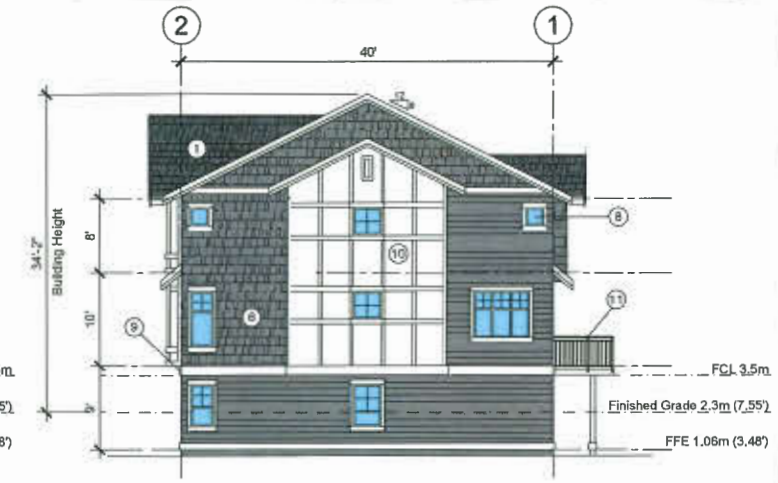

2 SIDE ELEVATION (SOUTH)
1/8" = 1'-0"

3 REAR ELEVATION (EAST)
1/8" = 1'-0"

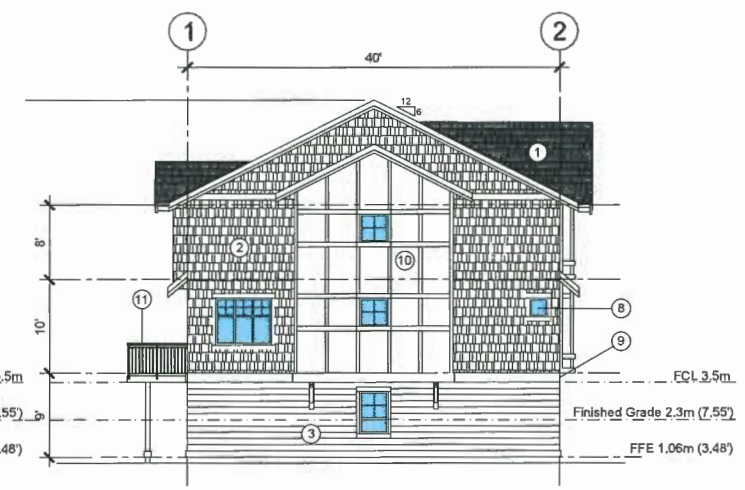

4 SIDE ELEVATION (NORTH)
1/8" = 1'-0"

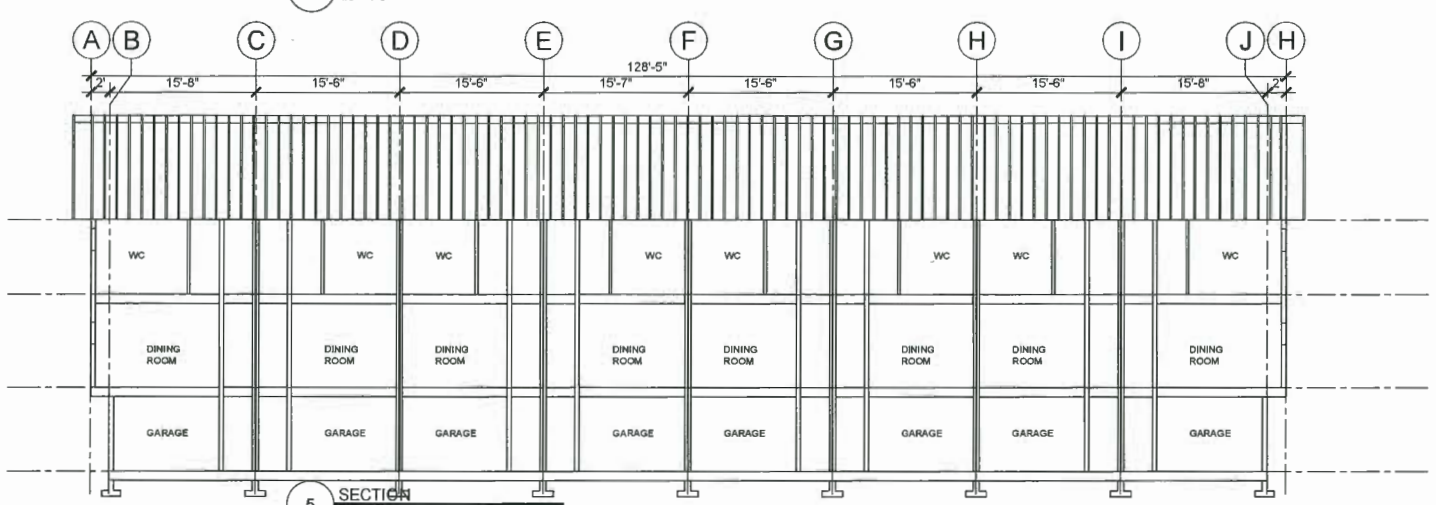

5 SECTION
1/8" = 1'-0"

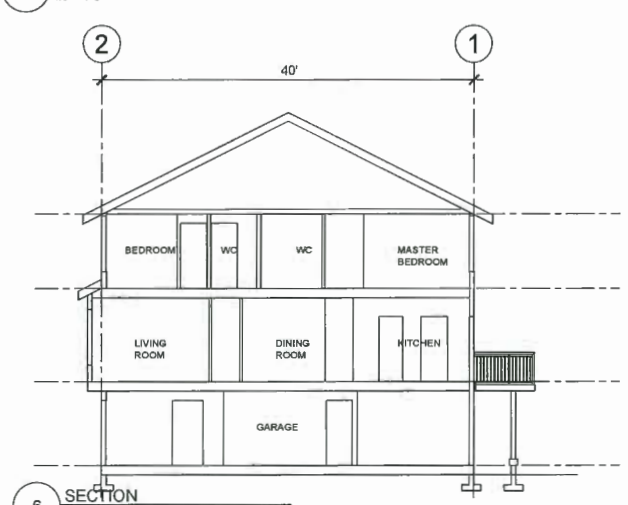

6 SECTION
1/8" = 1'-0"

This drawings must not be scaled. The General Contractor shall verify all dimensions, datums and levels prior to commencement of work. All errors and omissions to be reported immediately to the Architect. Variations and modifications to work shown shall not be carried out without the written permission from the Architect. Copyright reserved. These drawings and the design are, and at all times remain, the exclusive property of the Architect, and cannot be used and/or reproduced without the consent of the Architect, in which case the reproduction must bear their name as the Architect.

DRAWING ISSUES

1	DEC 22,2016	ISSUE FOR REZONING
2	APR 4 ,2017	RE-ISSUE FOR REZONING
3	JUL 19, 2017	ISSUE FOR DEVELOPMENT PERMIT
4	MAR 6, 2018	RE-ISSUE FOR DEVELOPMENT PERMIT

CONSULTANTS

CLIENT

REFINED PROPERTIES

engage ARCHITECTURE

ENGAGE ARCHITECTURE INC
B1 - 343 RAILWAY STREET
VANCOUVER BC V6A 1A4
T: 778-772-4034
www.engagearchitecture.ca

PROJECT# 16.15

SEAL

PROJECT

WESTMINSTER AT MCLEAN TOWNHOUSES

22720 AND 22740 WESTMINSTER HWY, RICHMOND BC

DRAWING

BUILDING 6
ELEVATIONS AND SECTIONS

CHECKED BY	DRAWN BY
KS	KS
DATE: JULY 2016	SCALE: 1/8" = 1'-0"

DWG No

A4-05

DP 17-781050-27

VINYL SHAKE SIDING- KAYCAN "MANOR"	VINYL SHAKE SIDING- KAYCAN "CHARCOAL"	VINYL SHAKE SIDING- KAYCAN "CLASSIC LINEN"	PAINTED DOOR BENJAMIN MOORE 2004-20 "CHILI PEPPER"	VINYL HORIZONTAL SIDING- KAYCAN "LINEN"	PAINTED DOOR BENJAMIN MOORE CC 966- "WIZARD"	VINYL HORIZONTAL SIDING -KAYCAN "CHARCOAL"	HARDI PANEL BENJAMIN MOORE OC-45 "SWISS COFFEE"	SHINGLE ROOFING IKO "CHARCOAL GREY"	VINYL HORIZONTAL SIDING- KAYCAN "MANOR"
1	2	3	4	5	6	7	8	9	10

This drawings must not be scaled. The General Contractor shall verify all dimensions, datums and levels prior to commencement of work. All errors and omissions to be reported immediately to the Architect. Variations and modifications to work shown shall not be carried out without the written permission from the Architect. Copyright reserved. These drawings and the design are, and at all times remain, the exclusive property of the Architect, and cannot be used and/or reproduced without the consent of the Architect, in which case the reproduction must bear their name as the Architect.

DRAFTING ISSUES

1	DEC 22,2016	ISSUE FOR REZONING
2	APR 4 ,2017	RE-ISSUE FOR REZONING
3	JUL 19, 2017	ISSUE FOR DEVELOPMENT PERMIT
4	MAR 9, 2018	RE-ISSUE FOR DEVELOPMENT PERMIT

CONSULTANTS

CLIENT

REFINED PROPERTIES

engage ARCHITECTURE

ENGAGE ARCHITECTURE INC
B1 - 343 RAILWAY STREET
VANCOUVER BC V6A 1A4
T: 778-772-4034
www.engagearchitecture.ca

PROJECT# 16.15

SEAL

PROJECT

WESTMINSTER AT MCLEAN TOWNHOUSES

22720 AND 22740 WESTMINSTER HWY.
RICHMOND BC

DRAWING

COLOUR AND MATERIAL BOARD

CHECKED BY	DRAWN BY
KS	KS
DATE	SCALE
JULY 2016	NTS

DWG No.

A4-06

DP 17-781050-28

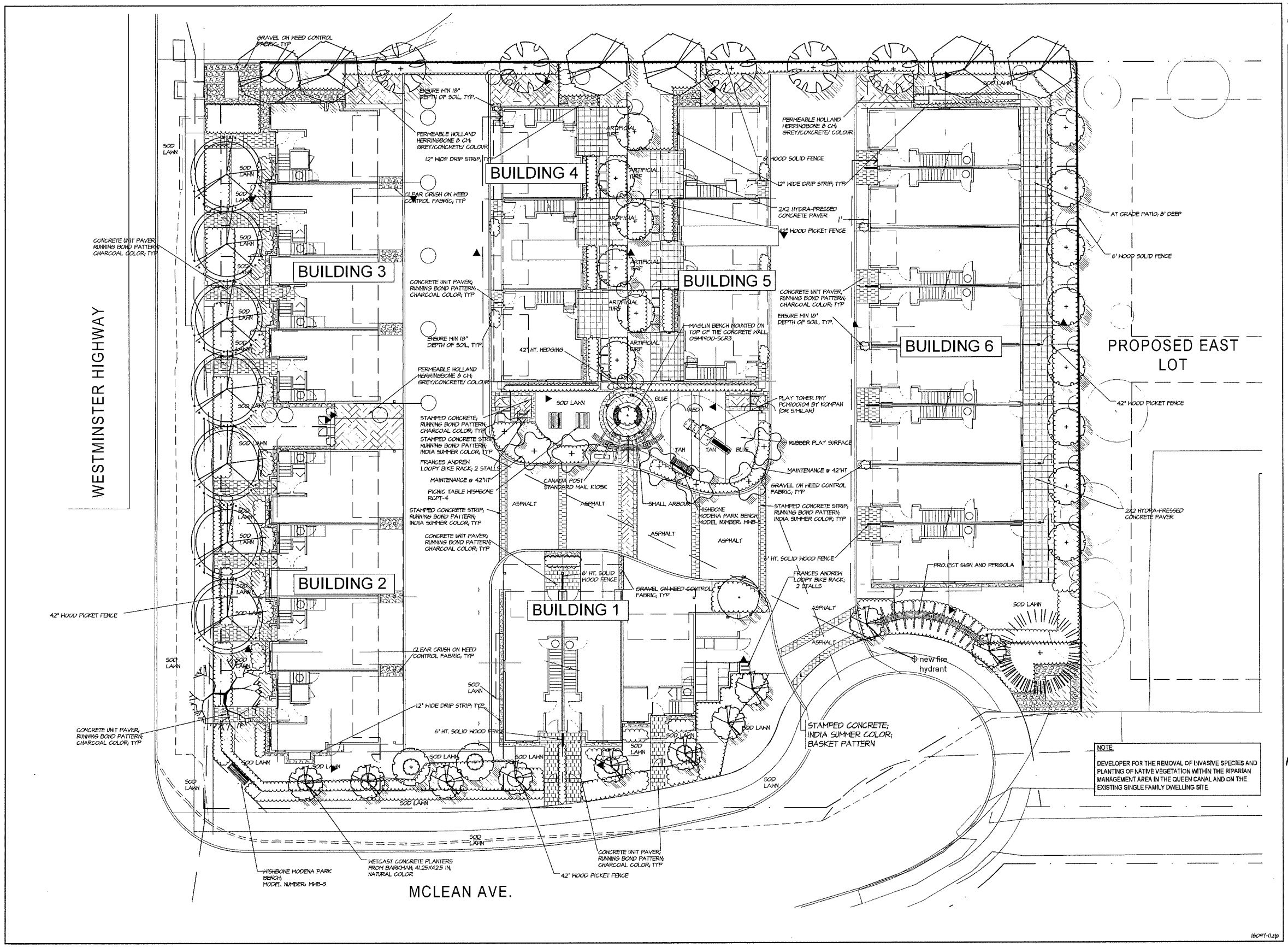

NOTE:

DEVELOPER FOR THE REMOVAL OF INVASIVE SPECIES AND PLANTING OF NATIVE VEGETATION WITHIN THE RIPARIAN MANAGEMENT AREA IN THE QUEEN CANAL AND ON THE EXISTING SINGLE FAMILY DWELLING SITE

16041-1.zip

©Copyright reserved. This drawing and design is the property of M2 Landscape Architects and may not be reproduced or used for other projects without their permission.

M2 LANDSCAPE ARCHITECTURE

#220 - 26 Lorne Mews
New Westminster, British Columbia
V3M 3L7
Tel: 604.553.0044
Fax: 604.553.0045
Email: office@m2la.com

NO.	DATE	REVISION DESCRIPTION	DR.
10	04.JAN.18	REV. AS PER NEW SITE PLAN	BN
9	18.MAY.16	REV. AS PER CITY COMMENTS	JB
8	18.MAR.06	REV. AS PER CITY COMMENTS	BN
7	18.MAR.01	REV. PER NEW SITE PLAN	MM
6	17.JUL.25	REV. PER ENGINEER COMMENTS/ RE-DP	GL
5	17.JUL.01	ISSUED FOR DP	GL
4	17.JAN.04	RE-ISSUED FOR REZONING	GL
3	17.MAR.21	REV. PER NEW SITE PLAN	GL
2	16.DEC.22	ISSUED FOR REZONING	GL
01	16.DEC.01	REV. PER NEW SITE PLAN	GL

SEAL:

PROJECT:

MULTI-FAMILY RESIDENTIAL DEVELOPMENT

22720/22740 WESTMINSTER HWY
RICHMOND, B.C.

DRAWING TITLE:

LANDSCAPE PLAN

DATE:	16.NOV.22	DRAWING NUMBER:
SCALE:	3/32"=1'-0"	L1
DRAWN:	GL	
DESIGN:	GL	
CHK'D:	MM	OF 4
M2LA PROJECT NUMBER:		16-097

DP 17-781050-29

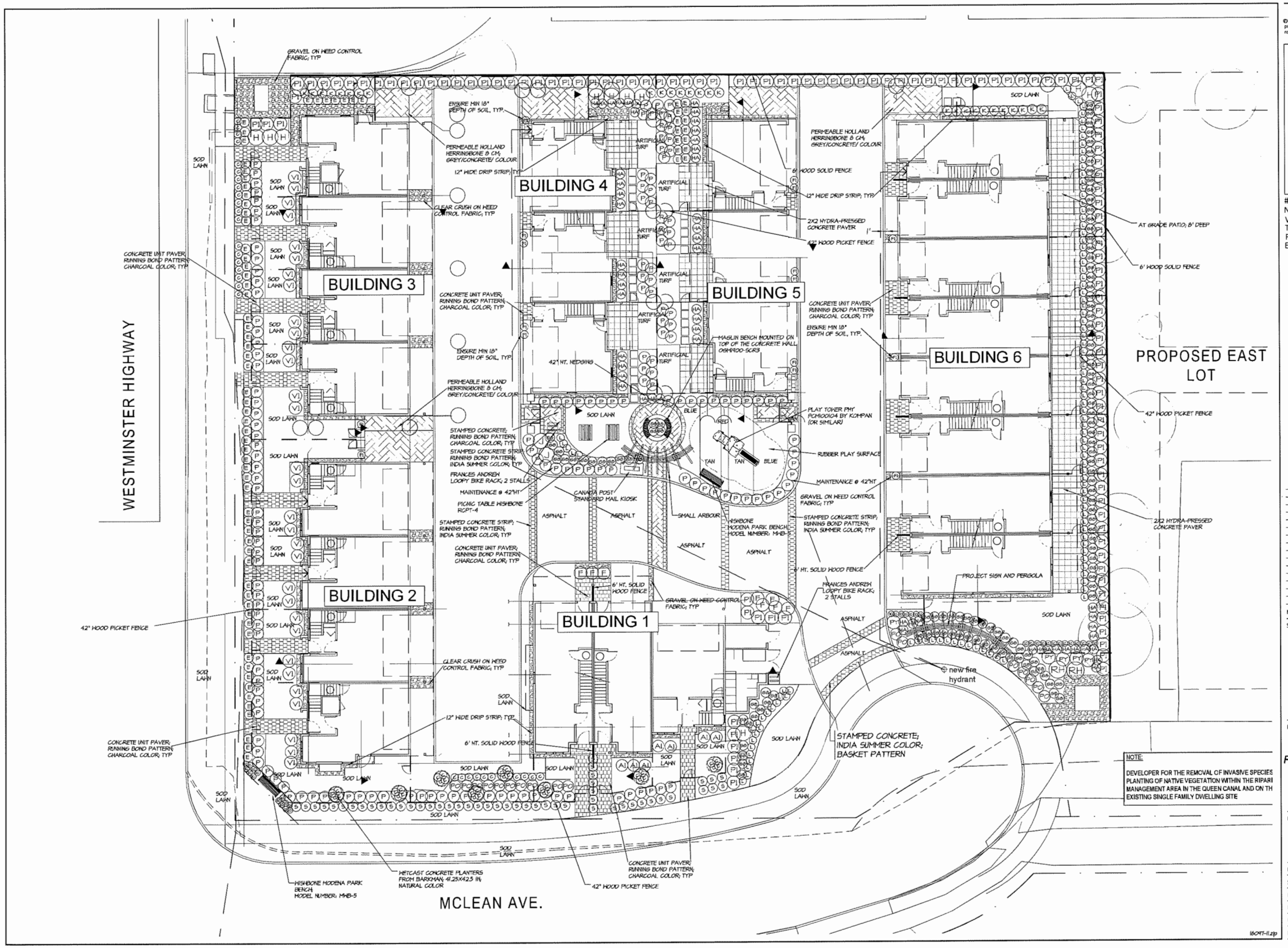

NOTE:

DEVELOPER FOR THE REMOVAL OF INVASIVE SPECIES PLANTING OF NATIVE VEGETATION WITHIN THE RIPARI MANAGEMENT AREA IN THE QUEEN CANAL AND ON TH EXISTING SINGLE FAMILY DWELLING SITE

©Copyright reserved. This drawing and design is the property of M2 Landscape Architects and may not be reproduced or used for other projects without their permission.

M2 LANDSCAPE ARCHITECTURE

#220 - 26 Lorne Mews
New Westminster, British Columbia
V3M 3L7
Tel: 604.553.0044
Fax: 604.553.0045
Email: office@m2la.com

NO.	DATE	REVISION DESCRIPTION	DR.
10	04.JAN18	REV. AS PER NEW SITE PLAN	BN
9	18.MAY18	REV. AS PER CITY COMMENTS	JB
8	18.MAR.04	REV. AS PER CITY COMMENTS	BN
7	18.MAR.01	REV. PER NEW SITE PLAN	MH
6	17.JUL.26	REV. PER ENGINEER COMMENTS/ RE-DP	GL
5	17.JUL.01	ISSUED FOR DP	GL
4	17.APR.04	RE-ISSUED FOR REZONING	GL
3	17.MAR.21	REV. PER NEW SITE PLAN	GL
2	16.DEC.22	ISSUED FOR REZONING	GL
01	16.DEC.07	REV. PER NEW SITE PLAN	GL

SEAL:

PROJECT:

MULTI-FAMILY RESIDENTIAL DEVELOPMENT

22720/22740 WESTMINSTER HWY
RICHMOND, B.C.

DRAWING TITLE:

SHRUB PLAN

DATE:	16.NOV.22	DRAWING NUMBER:
SCALE:	3/32"=1'-0"	L2
DRAWN:	GL	
DESIGN:	GL	
CHK'D:	MH	OF 4
M2LA PROJECT NUMBER:		16-097

16097-ll.zip

DP 17-781020 -30

PLANT SCHEDULE

M2 JOB NUMBER: 19097

KEY	QTY	BOTANICAL NAME	COMMON NAME	PLANTED SIZE / REMARKS
TREE				
(AF)	10	FAGUS SYLVATICA 'DAHYCKII GOLD'	GOLDEN FASTIGIATE BEECH	6CM CAL; B&B
(KO)	2	MAGNOLIA KOBUS STELLATA	STAR MAGNOLIA	2M HT; B&B
(YB)	6	MAGNOLIA x 'YELLOW BIRD'	MAGNOLIA	6CM CAL;2M STD;B&B
(PP)	16	PARROTIA PERSICA	PERSIAN IRONWOOD	2.5M HT;MTI TREE FROM; B&B
(PT)	1	PAULOWNIA TOMENTOSA	EMPRESS TREE	5CM CAL; 1.5 STD
(PS)	5	PINUS SYLVESTRIS	SCOTS PINE	3.5M HT; B&B
(PM)	1	PSEUDOTSUGA MENZIESII	DOUGLAS FIR	3M HT; B&B
(QC)	7	QUERCUS COCCINEA	SCARLET OAK	6CM CAL; 1.8M STD; B&B
(SR)	7	SYRINGA RETICULATA	IVORY SILK TREE	6CM CAL; 1.5M STD; B&B
SHRUB				
(AJ)	7	AZALEA JAPONICA 'CORAL BELLS'	AZALEA; SHELL PINK	#3 POT; 40CM
(HM)	2	HYDRANGEA MACROPHYLLA 'FOREVER PINK'	BIGLEAF HYDRANGEA	#2 POT; 50CM
(HP)	10	HYDRANGEA PANICULATA 'LIME LIGHT'	LIME LIGHT HYDRANGEA; LIMEGREEN-PINK	#2 POT; 50CM
(LF)	16	LONICERA PILEATA	PRIVET HONEYSUCKLE	#1 POT; 25CM
(PJ)	5	PIERIS JAPONICA 'MOUNTAIN FIRE'	JAPANESE ANDROMEDA	#3 POT; 50CM
(PF)	11	POTENTILLA FRUTICOSA 'KLONDYKE'	SHRUBBY CINQUEFOIL; YELLOW	#2 POT; 30CM
(PL)	166	PRUNUS LAUROCERASUS 'OTTO LUYKEN'	OTTO LUYKEN LAUREL	#3 POT; 50CM
(RB)	2	RHODODENDRON 'BOW BELLS'	RHODODENDRON; PINK	#3 POT; 30CM
(SH)	21	SARCOCOCCA HOOKERIANA VAR. HUMILIS	HIMALAYAN SWEET BOX	#2 POT; 25CM
(SJ)	49	SPIRAEA X JAPONICA 'LITTLE PRINCESS'	LITTLE PRINCESS SPIRAEA; PINK	#2 POT; 40CM
(TH)	114	TAXUS X MEDIA 'HICKSII'	HICK'S YEW	1.5M B&B
(VT)	31	VIBURNUM TINUS 'GWENLLIAN'	GWENLLIAN SPRING BOUQUET	#3 POT
GRASS				
(FO)	61	FESTUCA OVINA 'GLAUCA'	BLUE FESCUE	#1 POT
(PM)	117	PENNISETUM ALOPECUROIDES 'MOUDRY'	MOUDRY FOUNTAIN GRASS	#1 POT
PERENNIAL				
(HS)	55	HOSTA 'SUN POWER'	SUN POWER HOSTA	#1 POT; SUN TOLLERANT
(IS)	34	IRIS SIBIRICA	SIBERIAN IRIS; BLUE VARIETY	#1 POT; 2 FAN
(LA)	108	LAVENDULA ANGUSTIFOLIA	ENGLISH LAVENDER	#1 POT
GC				
(BP)	77	EUONYMUS JAPONICA PALOMA BLANCA	EUONYMUS;	#1 POT; 25CM
(PA)	8	POLYSTICHUM SETIFERUM	ALASKAN FERN	#1 POT; 25CM

NOTES: * PLANT SIZES IN THIS LIST ARE SPECIFIED ACCORDING TO THE BC LANDSCAPE STANDARD, LATEST EDITION. CONTAINER SIZES SPECIFIED AS PER CNTA STANDARDS. BOTH PLANT SIZE AND CONTAINER SIZE ARE THE MINIMUM ACCEPTABLE SIZES. * REFER TO SPECIFICATIONS FOR DEFINED CONTAINER MEASUREMENTS AND OTHER PLANT MATERIAL REQUIREMENTS. * SEARCH AND REVIEW MAKE PLANT MATERIAL AVAILABLE FOR OPTIONAL REVIEW BY LANDSCAPE ARCHITECT AT SOURCE OF SUPPLY. AREA OF SEARCH TO INCLUDE LOWER MAINLAND AND FRASER VALLEY. * SUBSTITUTIONS: OBTAIN WRITTEN APPROVAL FROM THE LANDSCAPE ARCHITECT PRIOR TO MAKING ANY SUBSTITUTIONS TO THE SPECIFIED MATERIAL. UNAPPROVED SUBSTITUTIONS WILL BE REJECTED. ALLOW A MINIMUM OF FIVE DAYS PRIOR TO DELIVERY FOR REQUEST TO SUBSTITUTE. SUBSTITUTIONS ARE SUBJECT TO BC LANDSCAPE STANDARD - DEFINITION OF CONDITIONS OF AVAILABILITY.

ALL PLANT MATERIAL MUST BE PROVIDED FROM CERTIFIED DISEASE FREE NURSERY. PROVIDE CERTIFICATION UPON REQUEST.

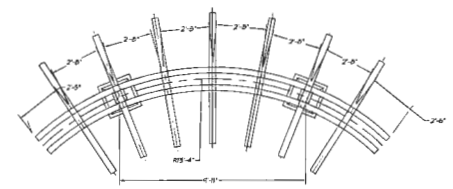

PLAN: SMALL ARBOUR

NOTES:
1. ALL WOOD (MIL CEDAR) POSTS TO BE FREE OF CRACKS
2. COAT ALL WOOD WITH 2 COATS PREMIUM WEATHERPROOFING WOOD STAIN, (SUCH AS BEHR SEMITRANSPARENT STAIN GREEN #404 (CONFIRM WITH LANDSCAPE ARCHITECT PRIOR TO APPLICATION

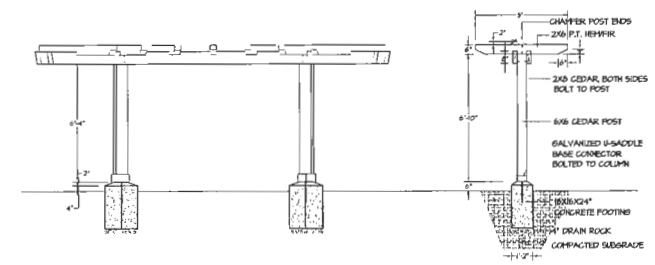

1 / L3 ARBOUR IN AMENITY AREA

SCALE : 1/4"=1'-0"

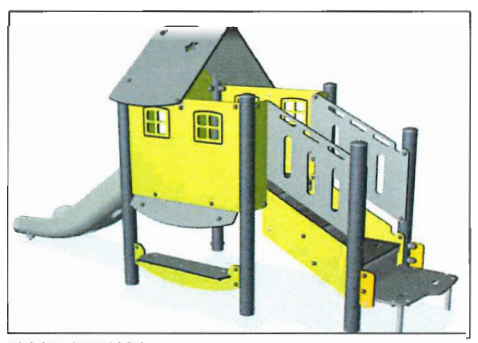

PLAY TOWER STYLE PLAY CRAFT
PLAT (CANADA) PTY LTD
KOMPAN (OR SIMILAR)
MODEL NUMBER: PGM100104
USER AGE: 2-6;

WISHBONE
MODENA PARK BENCH;
MODEL NUMBER: MKB-5;
POWER COATED IN BLACK

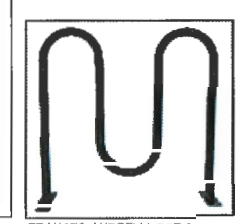

FRANCES ANDREW LOOPY
BIKE RACK -SERIES 21

WETCAST CONCRETE
PLANTERS FROM BARKMAN;
41.25X42.5 IN; NATURAL
COLOR

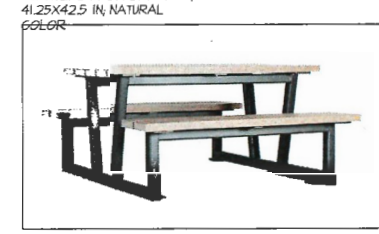

WISHBONE
PICNIC TABLE;
MODEL NUMBER: RCPT-4;
POWER COATED

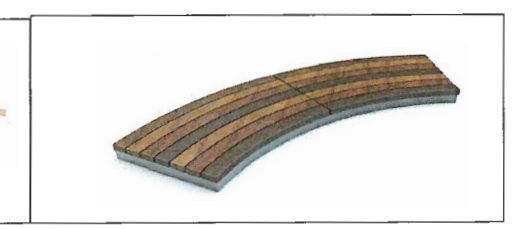

MAGLIN
IPE WOOD BENCH;
MODEL NUMBER: OSM1900-SCR2;

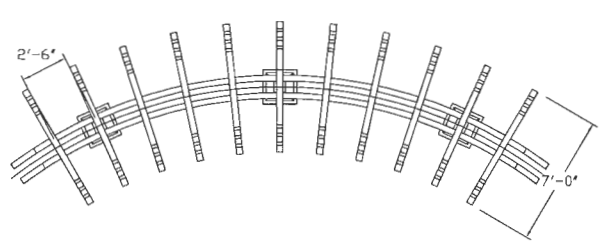

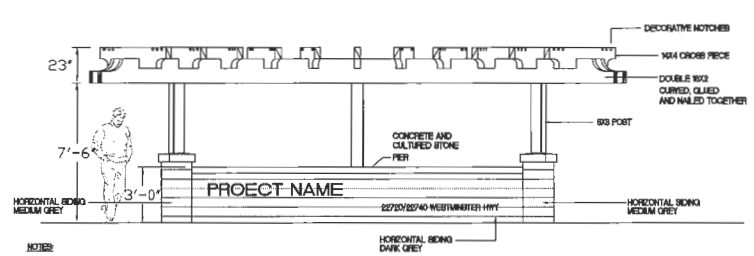

NOTES:
1. ALL WOOD (MIL CEDAR) POSTS TO BE FREE OF CRACKS
2. COAT ALL WOOD WITH 2 COATS PREMIUM WEATHERPROOFING WOOD STAIN, (SUCH AS BEHR SEMITRANSPARENT STAIN GREEN #404 (CONFIRM WITH LANDSCAPE ARCHITECT PRIOR TO APPLICATION

2 / L3 PROJECT SIGN & PERGOLA

SCALE : 1/4"=1'-0"

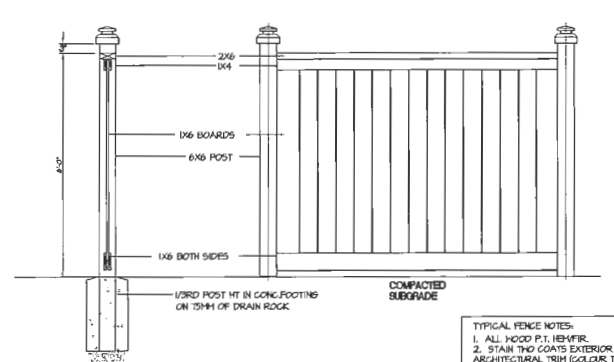

TYPICAL FENCE NOTES:
1. ALL WOOD P.T. HEMFIR.
2. STAIN TWO COATS EXTERIOR STAIN, TO MATCH ARCHITECTURAL TRIM (COLOUR TO BE PREAPPROVED BY OWNER)
3. ALL HARDWARE HOT DIPPED GALVANIZED.
4. GATE HARDWARE TO BE PREAPPROVED BY OWNER.

3 / L3 6'HT SOLID WOOD FENCE

SCALE : 1/2"=1'-0"

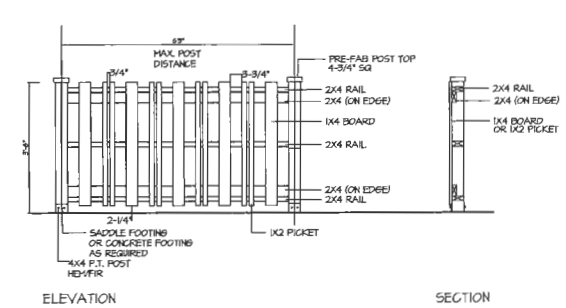

NOTES:
1. ALL WOOD P.T. HEMFIR
2. STAIN TO MATCH ARCH. TWO COATS PREMIUM WEATHER PROOFING STAIN
3. ALL FASTENERS HOT-DIPPED GALVANIZED
4. REFER TO LANDSCAPE PLAN FOR FENCE HEIGHT.

4 / L3 42"HT WOOD PICKET FENCE

SCALE : 1/2"=1'-0"

©Copyright reserved. This drawing and design is the property of M2 Landscape Architects and may not be reproduced or used for other projects without their permission.

M2 LANDSCAPE ARCHITECTURE

#220 - 26 Lorne Mews
New Westminster, British Columbia
V3M 3L7
Tel: 604.553.0044
Fax: 604.553.0045
Email: office@m2la.com

NO.	DATE	REVISION DESCRIPTION	DR.
10	04.JAN.06	REV. AS PER NEW SITE PLAN	EN
9	18.MAY.06	REV. AS PER CITY COMMENTS	JG
8	15.MAR.06	REV. AS PER CITY COMMENTS	EN
7	13.MAR.06	REV. PER NEW SITE PLAN	MH
6	17.JUL.05	REV. PER ENGINEER COMMENTS/RE-DP	GL
5	17.JUL.01	ISSUED FOR DP	GL
4	17.APR.24	RE-ISSUED FOR REZONING	GL
3	17.MAR.21	REV. PER NEW SITE PLAN	GL
2	16.DEC.22	ISSUED FOR REZONING	GL
01	16.DEC.07	REV. PER NEW SITE PLAN	GL

SEAL:

PROJECT:

MULTI-FAMILY RESIDENTIAL DEVELOPMENT

22720/22740 WESTMINSTER HWY
RICHMOND, B.C.

DRAWING TITLE:

LANDSCAPE DETAILS

DATE:	16.NOV.22	DRAWING NUMBER:
SCALE:		L3
DRAWN:	GL	
DESIGN:	GL	OF 4
CHK'D:	MH	
M2LA PROJECT NUMBER:		16-097

16097-11.zip

DP 17-761650-31

PART ONE GENERAL REQUIREMENTS

1.0 GENERAL

1.1 [illegible]

1.2 [illegible]

1.3 [illegible]

1.4 [illegible]

1.5 [illegible]

1.6 [illegible]

2.0 REFERENCE

2.1 [illegible]

2.2 [illegible]

3.0 [illegible]

3.1 [illegible]

3.2 [illegible]

3.3 [illegible]

3.4 [illegible]

3.5 [illegible]

3.6 [illegible]

3.7 [illegible]

3.8 [illegible]

3.9 [illegible]

3.10 [illegible]

3.11 [illegible]

3.12 [illegible]

3.13 [illegible]

3.14 [illegible]

3.15 [illegible]

3.16 [illegible]

3.17 [illegible]

3.18 [illegible]

3.19 [illegible]

4.0 [illegible]

4.1 [illegible]

4.2 [illegible]

PART TWO SCOPE OF WORK

2.0 SCOPE OF WORK

2.1 [illegible]

2.2 [illegible]

2.3 [illegible]

2.4 [illegible]

2.5 [illegible]

2.6 [illegible]

2.7 [illegible]

2.8 [illegible]

2.9 [illegible]

2.10 [illegible]

2.11 [illegible]

2.12 [illegible]

2.13 [illegible]

2.14 [illegible]

2.15 [illegible]

2.16 [illegible]

2.17 [illegible]

2.18 [illegible]

2.19 [illegible]

2.20 [illegible]

2.21 [illegible]

2.22 [illegible]

PART THREE SOFT LANDSCAPE DEVELOPMENT

3.0 [illegible]

3.1 [illegible]

3.2 [illegible]

3.3 [illegible]

3.4 [illegible]

3.5 [illegible]

3.6 [illegible]

3.7 [illegible]

3.8 [illegible]

3.9 [illegible]

3.10 [illegible]

3.11 [illegible]

3.12 [illegible]

3.13 [illegible]

3.14 [illegible]

3.15 [illegible]

3.16 [illegible]

3.17 [illegible]

3.18 [illegible]

3.19 [illegible]

3.20 [illegible]

3.21 [illegible]

3.22 [illegible]

3.23 [illegible]

3.24 [illegible]

3.25 [illegible]

3.26 [illegible]

3.27 [illegible]

3.28 [illegible]

3.29 [illegible]

3.30 [illegible]

3.31 [illegible]

3.32 [illegible]

3.33 [illegible]

3.34 [illegible]

3.35 [illegible]

PART THREE SOFT LANDSCAPE DEVELOPMENT - CONT

[illegible]

PART THREE SOFT LANDSCAPE DEVELOPMENT - CONT

[illegible]

©Copyright reserved. This drawing and design is the property of M2 Landscape Architects and may not be reproduced or used for other projects without their permission.

LANDSCAPE ARCHITECTURE

#220 - 26 Lorne Mews
New Westminster, British Columbia
V3M 3L7
Tel: 604.553.0044
Fax: 604.553.0045
Email: office@m2la.com

NO.	DATE	REVISION DESCRIPTION	DR.
[illegible]	[illegible]	[illegible]	[illegible]

SEAL:

PROJECT:

MULTI-FAMILY RESIDENTIAL DEVELOPMENT
22720/22740 WESTMINSTER HWY
RICHMOND, B.C.

DRAWING TITLE:

LANDSCAPE SPECIFICATIONS

DATE: [illegible]	DRAWING NUMBER: L4
SCALE:	
DRAWN: [illegible]	
DESIGN: [illegible]	
CHK'D: [illegible]	OF 4
M2LA PROJECT NUMBER:	16-097

DP 17-781050 -32